Empowered by Innovation NEC

NEC Express5800/R120e-1M
System Configuration Guide

Introduction
This document contains product and configuration information that will enable you to configure your system. The guide will ensure fast and proper configuration of your NEC Express5800 server.

January 28, 2015
Revision 6.0
NEC Corporation

Contents

TECHNICAL SPECIFICATION 3
Key Features 3
Specification 3
EXTERNAL VIEWS 8
Front and Rear Views 8
Dimensions (mm) 9
CONFIGURATION DIAGRAM 10
Expansion Slots 10
SERVER CONFIGURATION 11
1 Base Models 11
2 Processors and Heat Sink 11
3 Memory 13
3.1 Memory Configuration 13
3.2 Other than Windows server 2008 Standard 13
3.3 Windows Server 2008 Standard 14
4 Internal Hard Disk Drives 18
4.1 RAID Configuration 18
4.2 Internal Drive Configuration 19
5 Optical Drive 28
6 PCI Card 29
6.1 Network Interface Controller 29
6.2 InfiniBand 31
6.3 PCIe SSD Adapter 32
6.4 External Storage Controller 32
6.5 Serial Port Adapter 33
7 Other Add-in Components 34
7.1 Power Supply 34
7.2 Trusted Platform Module Kit 34
7.3 Internal Flash Memory 34
7.4 Flash FDD 34
7.5 Front Bezel 35
8 Add-on Components 36
8.1 17-inch LCD Console Drawer 36
8.2 KVM Switch 36
8.3 Cable Management Arm 37
8.4 Server Management License 37
REFERENCES 38
Server Management 38
OS Support Matrix for PCI Cards and Embedded Controllers 39
Supported PCI Cards and Installable Slots 40
Copyright Notice and Liability Disclaimer 41
REVISION HISTORY 42

Technical Specification

Key Features

- High performance with the latest Intel® Xeon® processor E5-2600 v2 Product Family
- Up to 1.5 TB of high speed DDR3 memory
- High energy efficiency with power capping feature and 80 PLUS® Platinum power supply
- Full manageability by integrated EXPRESSSCOPE Engine 3

Specification

(1 / 3)

Model		R120e-1M			
Part Number		N8100-2073F			
Processor	**Type**	Intel® Xeon® processor E5-2609 v2	Intel® Xeon® processor E5-2620 v2	Intel® Xeon® processor E5-2630 v2	Intel® Xeon® processor E5-2630L v2
	Clock speed	2.50GHz	2.10 GHz	2.60 GHz	2.40 GHz
	Number of Processors	1 or 2			
	Cache	10 MB	15 MB		
	Cores and Threads	4C-4T	6C-12T		
Chipset		Intel® C602-J Chipset			
Memory	**Type**	DDR3-1333 ECC Unbuffered Low Power DIMM, DDR3-1600 ECC Registered Low Power DIMM, DDR3-1333 ECC Load Reduced DIMM, DDR3-1600 ECC Load Reduced DIMM			
	Standard Capacity	0 GB			
	Maximum Capacity	1.5 TB (24 x 64 GB)			
	Memory protection	ECC, x4 SDDC, Memory Mirroring, Memory Lockstep, Memory Sparing			
Internal Storage	**Standard Capacity**	0 GB			
	Maximum Capacity	SAS HDD: 9.6 TB (8 x 1.2 TB) SATA HDD: 8 TB (8 x 1 TB) SAS SSD: 3.2 TB (8 x 400 GB)			
	Disk Controller	SATA : 3Gb/s and 6Gb/s (Integrated) SAS: 6Gb/s (Optional)			
	RAID	SATA : RAID 0/1/5/6/10/50/60 (Optional) SAS : RAID 0/1/5/6/10/50/60 (Optional)			
	Hot Plug	Supported			
	Optical Disk Drive	Optional			
	Optical Drive Bays	1			
	Disk Drive Bays	6 or 8 with optional drive cage			
Expansion Slots	**Standard**	Total: 4 slots available 1 PCIe 3.0 x16 (x16 connector) 1 PCIe 3.0 x8 (x16 connector) 1 PCIe 3.0 x8 (x8 connector) dedicated RAID slot 1 PCIe 3.0 x8 (x8 connector) flexible integrated NIC slot			
Video	**Controller (VRAM)**	Integrated in Server Management Controller (32MB)			
	Resolution / Color	1280 x 1024 / 16.7M [1]			
Interfaces		2 x VGA (15-pin mini D-sub, 1 x front, 1 x rear) 1 x Serial (9-pin mini D-sub, RS232-C, Serial A, 1 x rear) 9 x USB2.0 (2 x front, 4 x rear, 3 x internal) 2 x 1000BASE-T LAN connector (RJ-45, 2 x rear) 1 x Management LAN connector (RJ-45, 1 x rear)			
Server Management		EXPRESSSCOPE Engine 3			

Model		R120e-1M			
Redundant Fan		Standard, non-hot plug			
Redundant Power Supply		Optional, hot plug			
Power Supply		1-2 x 450 Watt or 800 Watt 80 PLUS® Platinum certified hot plug PSU 100-240 VAC ± 10% 50 / 60 Hz ± 3 Hz			
Power Consumption	(Max. Config, Idling)	275 VA / 273 Watt	277 VA / 275 Watt	277 VA / 275 Watt	277 VA / 276 Watt
	(Max. Config, Operating)	375 VA / 373 Watt	411 VA / 409 Watt	479 VA / 476 Watt	427 VA / 424 Watt
Acoustical Noise (Sound Pressure Level) [2]	Max. Config, Idling	48.1 dB	48.1 dB	48.1 dB	48.1 dB
	Max. Config, Operating	53.7 dB	53.7 dB	53.7 dB	52.4 dB
Dimensions (W x D x H)		439.8 x 722.0 x 43.4 mm / 17.3 x 28.4 x 1.7 in (1U)			
Weight (Minimum / Maximum)		15.2 kg / 23.0 kg, 33.51 lbs. / 50.71 lbs.			
Temperature, Relative Humidity (non-condensing)		Operating: 10° to 40° C / 50° to 104° F, 20 to 80% Non-Operating: -10° to 55° C / 14° to 131° F, 20 to 80%			
Regulatory and Safety		FCC, RCM, CE, UL, CB, BSMI, KC, CCC, BIS, RoHS, WEEE			
Operating Systems		Microsoft® Windows Server® 2008 Standard Microsoft® Windows Server® 2008 Enterprise Microsoft® Windows Server® 2008 Standard (x64) Microsoft® Windows Server® 2008 Enterprise (x64) Microsoft® Windows Server® 2008 R2 Standard Microsoft® Windows Server® 2008 R2 Enterprise Microsoft® Windows Server® 2012 Standard Microsoft® Windows Server® 2012 Datacenter Microsoft® Windows Server® 2012 R2 Standard [3] Microsoft® Windows Server® 2012 R2 Datacenter [3] Red Hat Enterprise Linux 5.9 or later (x86) [4] Red Hat Enterprise Linux 5.9 or later (x86_64) [4] Red Hat Enterprise Linux 6.4 or later (x86) [4] Red Hat Enterprise Linux 6.4 or later (x86_64) [4] Red Hat Enterprise Linux 7.0 or later [4] VMware ESXi 5.0 Update 2 VMware ESXi 5.1 Update 1 VMware ESXi 5.5 VMware ESX™i 5.5 Update 1			

1 Maximum resolution available via EXPRESSSCOPE Engine 3 remote console is 1280 x 1024 / 65K colors.

2 Noise emission was measured at the bystander positions in accordance with ISO 7779. The actual value may vary by the operating environment.

3 For Windows Server 2012 R2 installation, download the driver kit from the following website and install it after OS installation
http://www.nec.com/en/global/prod/express/download/

4 For Linux support, contact your sales representative or go to the NEC website at:
http://www.nec.com/global/prod/express/linux/index.html

(2 / 3)

Model		R120e-1M			
Part Number		N8100-2073F			
Processor	Type	Intel® Xeon® processor E5-2637 v2	Intel® Xeon® processor E5-2640 v2	Intel® Xeon® processor E5-2650 v2	Intel® Xeon® processor E5-2660 v2
	Clock speed	3.50 GHz	2 GHz	2.60 GHz	2.20 GHz
	Number of Processors	1 or 2			
	Cache	15 MB	20 MB		25MB
	Cores and Threads	4C-8T	8C-16T		10C-20T
Chipset		Intel® C602-J Chipset			

Model		**R120e-1M**			
Memory	**Type**	DDR3-1600 ECC Unbuffered Low Power DIMM DDR3-1600 ECC Registered Low Power DIMM DDR3-1866 ECC Registered DIMM [1] DDR3-1600 ECC Load Reduced DIMM DDR3-1333 ECC Load Reduced DIMM			
	Standard Capacity	0 GB			
	Maximum Capacity	1.5 TB (24 x 64 GB)			
	Memory protection	ECC, x4 SDDC, Memory Mirroring, Memory Lockstep, Memory Sparing			
Internal Storage	**Standard Capacity**	0 GB			
	Maximum Capacity	SAS HDD: 9.6 TB (8 x 1.2 TB) SATA HDD: 8 TB (8 x 1 TB) SAS SSD: 3.2 TB (8 x 400 GB)			
	Disk Controller	SATA : 3Gb/s and 6Gb/s (Integrated) SAS: 6Gb/s (Optional)			
	RAID	SATA : RAID 0/1/5/6/10/50/60 (Optional) SAS : RAID 0/1/5/6/10/50/60 (Optional)			
	Hot Plug	Supported			
	Optical Disk Drive	Optional			
	Optical Drive Bays	1			
	Disk Drive Bays	6 or 8 with optional drive cage			
Expansion Slots	**Standard**	Total: 4 slots available 1 PCIe 3.0 x16 (x16 connector) 1 PCIe 3.0 x8 (x16 connector) 1 PCIe 3.0 x8 (x8 connector) dedicated RAID slot 1 PCIe 3.0 x8 (x8 connector) flexible integrated NIC slot			
Video	**Controller (VRAM)**	Integrated in Server Management Controller (32MB)			
	Resolution / Color	1280 x 1024 / 16.7M [2]			
Interfaces		2 x VGA (15-pin mini D-sub, 1 x front, 1 x rear) 1 x Serial (9-pin mini D-sub, RS232-C, Serial A, 1 x rear) 9 x USB2.0 (2 x front, 4 x rear, 3 x internal) 2 x 1000BASE-T LAN connector (RJ-45, 2 x rear) 1 x Management LAN connector (RJ-45, 1 x rear)			
Server Management		EXPRESSSCOPE Engine 3			
Redundant Fan		Standard, non-hot plug			
Redundant Power Supply		Optional, hot plug			
Power Supply		1-2 x 450 Watt or 800 Watt 80 PLUS® Platinum certified hot plug PSU 100-240 VAC ± 10% 50 / 60 Hz ± 3 Hz			
Power Consumption	**(Max. Config, Idling)**	279 VA / 277 Watt	292 VA / 290 Watt	286 VA / 284 Watt	288 VA / 286 Watt
	(Max. Config, Operating)	493 VA / 490 Watt	506 VA / 503 Watt	548 VA / 545 Watt	542 VA / 538 Watt
Acoustical Noise (Sound Pressure Level) [3]	**Max. Config, Idling**	48.1 dB	48.1 dB	48.1 dB	48.1 dB
	Max. Config, Operating	59.6 dB	53.7 dB	53.7dB	53.7 dB
Dimensions (W x D x H)		439.8 x 722.0 x 43.4 mm / 17.3 x 28.4 x 1.7 in (1U)			
Weight (Minimum / Maximum)		15.2 kg / 23.0 kg, 33.51 lbs. / 50.71 lbs.			
Temperature, Relative Humidity (non-condensing)		Operating: 10° to 40° C [4] / 50° to 104° F [4], 20 to 80% Non-Operating: -10° to 55° C / 14° to 131° F, 20 to 80%			
Regulatory and Safety		FCC, RCM, CE, UL, CB, BSMI, KC, CCC, BIS, RoHS, WEEE			
Operating Systems		Microsoft® Windows Server® 2008 Standard [5] Microsoft® Windows Server® 2008 Enterprise [5] Microsoft® Windows Server® 2008 Standard (x64) Microsoft® Windows Server® 2008 Enterprise (x64) Microsoft® Windows Server® 2008 R2 Standard Microsoft® Windows Server® 2008 R2 Enterprise			

Model	R120e-1M
Operating Systems (Cont.)	Microsoft® Windows Server® 2012 Standard Microsoft® Windows Server® 2012 Datacenter Microsoft® Windows Server® 2012 R2 Standard [6] Microsoft® Windows Server® 2012 R2 Datacenter [6]Red Hat Enterprise Linux 5.9 or later (x86) [4] Red Hat Enterprise Linux 5.9 or later (x86_64) [4] Red Hat Enterprise Linux 6.4 or later (x86) [5 7] Red Hat Enterprise Linux 6.4 or later (x86_64) [7] Red Hat Enterprise Linux 7.0 or later [4] VMware ESXi 5.0 Update 2 VMware ESXi 5.1 Update 1 VMware ESXi 5.5 VMware ESX™i 5.5 Update 1

1 Not supported on Xeon® processor E5-2637 v2 systems
2 Maximum resolution available via EXPRESSSCOPE Engine 3 remote console is 1280 x 1024 / 65K colors.
3 Noise emission was measured at the bystander positions in accordance with ISO 7779. The actual value may vary by the operating environment.
4 Operable up to 35°C (95°F) when installing Xeon processor E5-2637 v2.
5 Not supported on Xeon® processor E5-2660 v2 systems
6 For Windows Server 2012 R2 installation, download the driver kit from the following website and install it after OS installation
http://www.nec.com/en/global/prod/express/download/
7 For Linux support, contact your sales representative or go to the NEC website at:
http://www.nec.com/global/prod/express/linux/index.html

(3 / 3)

Model		R120e-1M			
Part Number		N8100-2073F			
Processor	**Type**	Intel® Xeon® processor E5-2670 v2	Intel® Xeon® processor E5-2690 v2	Intel® Xeon® processor E5-2695 v2	Intel® Xeon® processor E5-2697 v2
	Clock speed	2.50 GHz	3 GHz	2.40 GHz	2.70 GHz
	Number of Processors	1 to 2			
	Cache	25 MB		30 MB	
	Cores and Threads	10C-20T		12C-24T	
Chipset		Intel® C602-J Chipset			
Memory	**Type**	DDR3-1333 ECC Unbuffered Low Power DIMM, DDR3-1600 ECC Registered Low Power DIMM, DDR3-1333 ECC Load Reduced DIMM, DDR3-1600 ECC Load Reduced DIMM			
	Standard Capacity	0 GB			
	Maximum Capacity	1.5 TB (24 x 64 GB)			
	Memory protection	ECC, x4 SDDC, Memory Mirroring, Memory Lockstep, Memory Sparing			
Internal Storage	**Standard Capacity**	0 GB			
	Maximum Capacity	SAS HDD: 9.6 TB (8 x 1.2 TB) SATA HDD: 8 TB (8 x 1 TB) SAS SSD: 3.2 TB (8 x 400 GB)			
	Disk Controller	SATA : 3Gb/s and 6Gb/s (Integrated) SAS: 6Gb/s (Optional)			
	RAID	SATA : RAID 0/1/5/6/10/50/60 (Optional) SAS : RAID 0/1/5/6/10/50/60 (Optional)			
	Hot Plug	Supported			
	Optical Disk Drive	Optional			

Model		R120e-1M			
Internal Storage (Cont.)	**Optical Drive Bays**	1			
	Disk Drive Bays	6 or 8 with optional drive cage			
Expansion Slots	**Standard**	Total: 4 slots available 1 PCIe 3.0 x16 (x16 connector) 1 PCIe 3.0 x8 (x16 connector) 1 PCIe 3.0 x8 (x8 connector) dedicated RAID slot 1 PCIe 3.0 x8 (x8 connector) flexible integrated NIC slot			
Video	**Controller (VRAM)**	Integrated in Server Management Controller (32MB)			
	Resolution / Color	1280 x 1024 / 16.7M [1]			
Interfaces		2 x VGA (15-pin mini D-sub, 1 x front, 1 x rear) 1 x Serial (9-pin mini D-sub, RS232-C, Serial A, 1 x rear) 9 x USB2.0 (2 x front, 4 x rear, 3 x internal) 2 x 1000BASE-T LAN connector (RJ-45, 2 x rear) 1 x Management LAN connector (RJ-45, 1 x rear)			
Server Management		EXPRESSSCOPE Engine 3			
Redundant Fan		Standard, non-hot plug			
Redundant Power Supply		Optional, hot plug			
Power Supply		1-2 x 450 Watt or 800 Watt 80 PLUS® Platinum certified hot plug PSU 100-240 VAC ± 10% 50 / 60 Hz ± 3 Hz			
Power Consumption	**(Max. Config, Idling)**	280 VA / 278 Watt	278 VA / 276 Watt	290 VA / 288 Watt	292 VA / 290 Watt
	(Max. Config, Operating)	563 VA / 559 Watt	674 VA / 669 Watt	644 VA / 640 Watt	687 VA / 682 Watt
Acoustical Noise (Sound Pressure Level) [2]	**Max. Config, Idling**	48.1 dB	48.1 dB	48.1dB	48.1dB
	Max. Config, Operating	53.7 dB	59.6 dB	53.7 dB	59.6 dB
Dimensions (W x D x H)		439.8 x 722.0 x 43.4 mm / 17.3 x 28.4 x 1.7 in (1U)			
Weight (Minimum / Maximum)		15.2 kg / 23.0 kg, 33.51 lbs. / 50.71 lbs.			
Temperature, Relative Humidity (non-condensing)		Operating: 10° to 40° C [3] / 50° to 104° F, 20 to 80% Non-Operating: -10° to 55° C / 14° to 131° F, 20 to 80%			
Regulatory and Safety		FCC, RCM, CE, UL, CB, BSMI, KC, CCC, BIS, RoHS, WEEE			
Operating Systems		Microsoft® Windows Server® 2008 Standard (x64) Microsoft® Windows Server® 2008 Enterprise (x64) Microsoft® Windows Server® 2008 R2 Standard Microsoft® Windows Server® 2008 R2 Enterprise Microsoft® Windows Server® 2012 Standard Microsoft® Windows Server® 2012 Datacenter Microsoft® Windows Server® 2012 R2 Standard [4] Microsoft® Windows Server® 2012 R2 Datacenter [4] Red Hat Enterprise Linux 5.9 or later (x86_64) [5] Red Hat Enterprise Linux 6.4 or later (x86_64) [5] Red Hat Enterprise Linux 7.0 or later [4] VMware ESXi 5.0 Update 2 VMware ESXi 5.1 Update 1 VMware ESXi 5.5 VMware ESX™i 5.5 Update 1			

[1] Maximum resolution available via EXPRESSSCOPE Engine 3 remote console is 1280 x 1024 / 65K colors.

[2] Noise emission was measured at the bystander positions in accordance with ISO 7779. The actual value may vary by the operating environment.

[3] Operable up to 35°C (95°F) when installing Xeon processor E5-2690 v2 or E5-2697 v2.

[4] For Windows Server 2012 R2 installation, download the driver kit from the following website and install it after OS installation
http://www.nec.com/en/global/prod/express/download/

[5] For Linux support, contact your sales representative or go to the NEC website at:
http://www.nec.com/global/prod/express/linux/index.html

External Views

Front and Rear Views

Front View

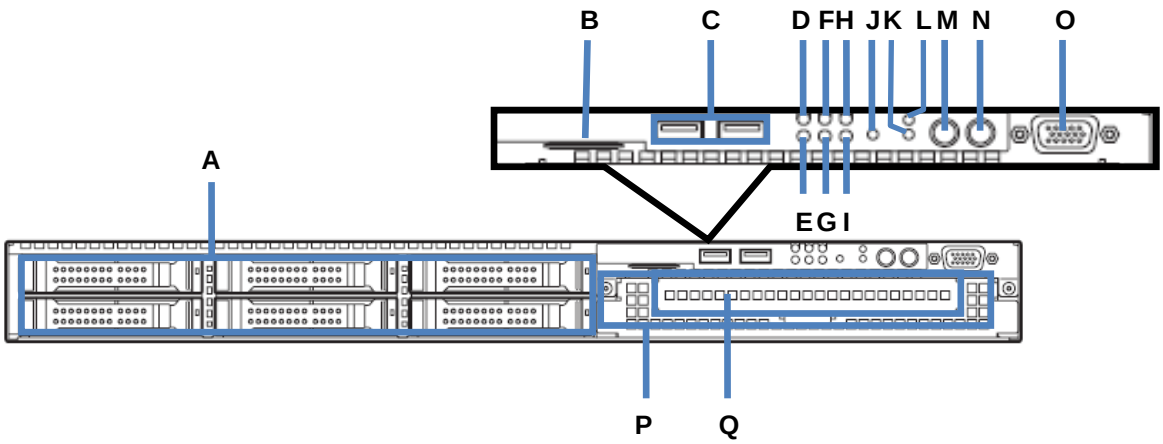

Legend			
A.	Drive Bays	**J.**	BMC RESET Switch
B.	Pull-out Tab	**K.**	DUMP Switch
C.	USB Connectors	**L.**	RESET Switch
D.	Data LAN 1 Activity LED	**M.**	UID LED Button/LED
E.	Data LAN 2 Activity LED	**N.**	POWER Button/LED
F.	Data LAN 3 Activity LED	**O.**	VGA Connector
G.	Data LAN 4 Activity LED	**P.**	2.5-inch Drive Cage (optional, 2 bays)
H.	Hard Drive Activity LED	**Q**	Optical Drive Bay (blank cover)
I.	System Status LED		

Rear View

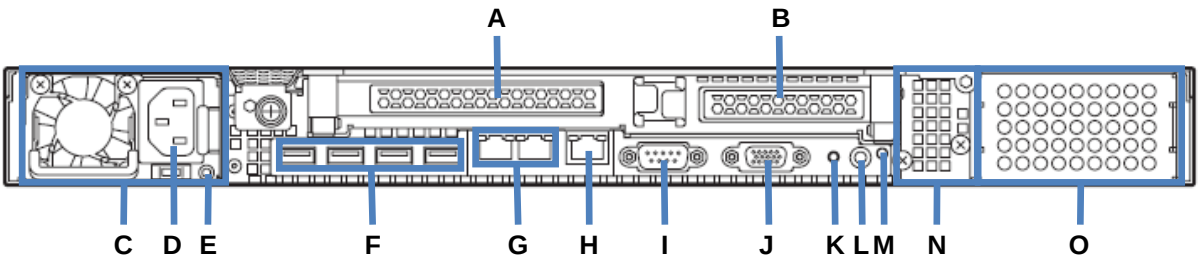

Legend			
A.	PCI Slot (Full Height)	**I.**	Serial Port Connector
B.	PCI Slot (Low Profile)	**J.**	VGA Connector
C.	Power Supply	**K.**	Dump (NMI) Switch
D.	AC Inlet	**L.**	UID LED Button/LED
E.	AC Power LED	**M.**	AC Power LED
F.	USB Connectors	**N.**	LAN Riser (blank cover)
G.	Data LAN Connectors	**O.**	Additional PS Slot (blank cover)
H.	Management LAN Connector		

Dimensions (mm)

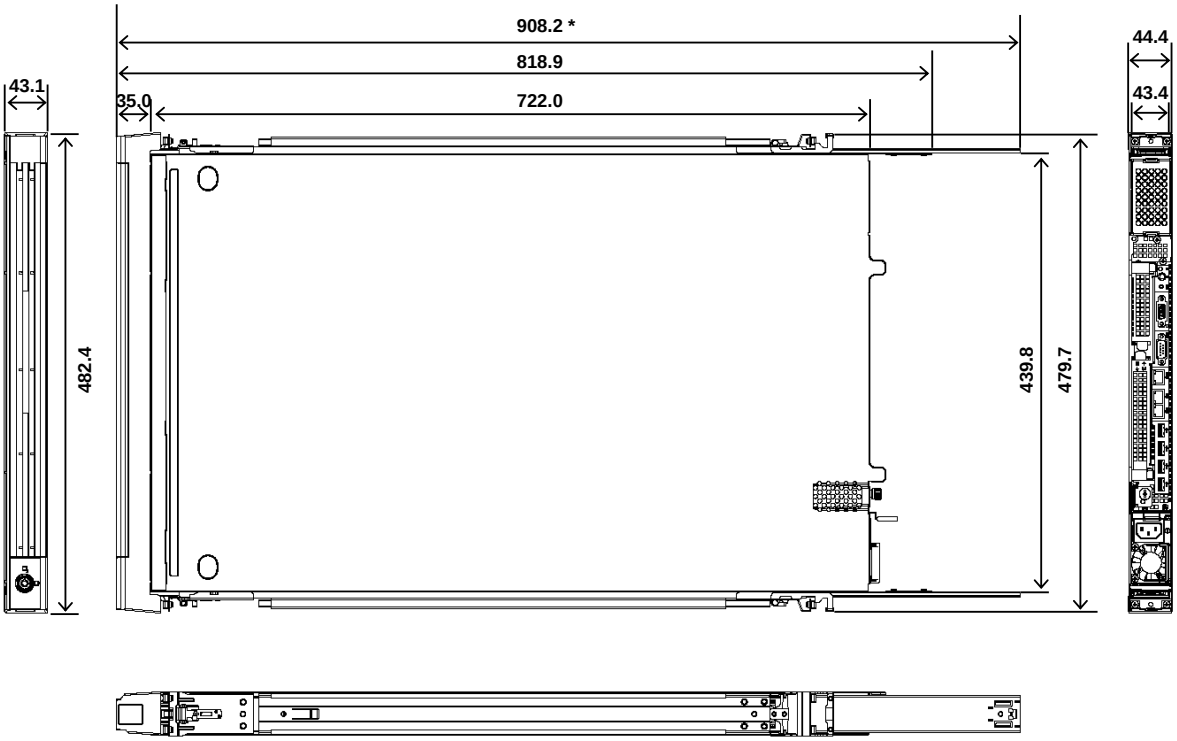

* With extension bracket of inner rails (when using cable management arm)

Configuration Diagram

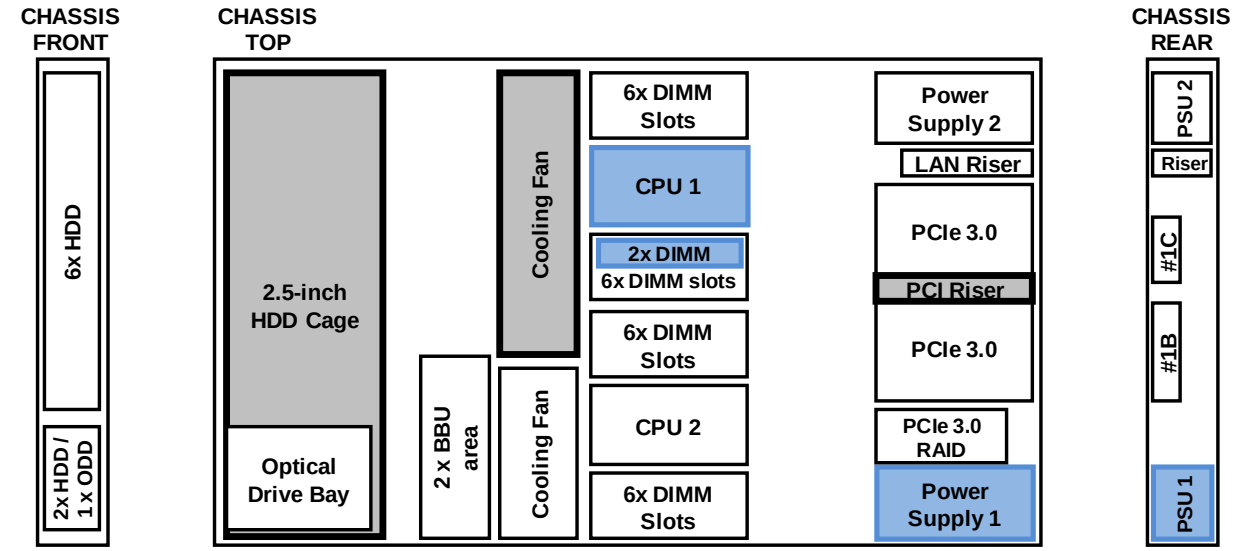

Legend: Mandatory components Standard Components

Expansion Slots

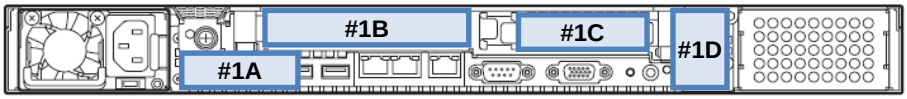

Legend	
#1A	PCIe 3.0 x8, x8 connector, for a dedicated RAID controller
#1B	PCIe 3.0 x16, x16 connector, Full-height, up to 220 mm length
#1C	PCIe 3.0 x8, x16 connector, Low-profile, up to 220 mm length
#1D	PCIe 3.0 x8, x8 connector, for a flexible integrated NIC (LAN Riser)

Server Configuration

1 Base Models

Product Name / Description	Part Number
NEC Express5800/R120e-1M Server no processor, no RAM, no HDD, no ODD, no PSU, no front bezel Including: 2.5-inch Drive Cage, EXPRESSBUILDER DVD	N8100-2073F

NOTE:

- The base model must be ordered with a processor kit.

2 Processors and Heat Sink

Available sockets: 2

Category		Product Name / Description	Part Number
Processor		**Xeon E5-2609 v2 Processor Kit** Intel® Xeon ® Processor E5-2609 v2 (2.50 GHz, 4C/4T, 10 MB)	N8101-675F
		Xeon E5-2620 v2 Processor Kit Intel® Xeon ® Processor E5-2620 v2 (2.10 GHz, 6C/12T, 15 MB)	N8101-676F
		Xeon E5-2630 v2 Processor Kit Intel® Xeon ® Processor E5-2630 v2 (2.60 GHz, 6C/12T, 15 MB)	N8101-677F
		Xeon E5-2630L v2 Processor Kit Intel® Xeon ® Processor E5-2630L v2 (2.40 GHz, 6C/12T, 15 MB)	N8101-678F
		Xeon E5-2637 v2 Processor Kit Intel® Xeon ® Processor E5-2637 v2 (3.50 GHz, 4C/8T, 15 MB)	N8101-679F
		Xeon E5-2640 v2 Processor Kit Intel® Xeon ® Processor E5-2640 v2 (2 GHz, 8C/16T, 20 MB)	N8101-680F
		Xeon E5-2650 v2 Processor Kit Intel® Xeon ® Processor E5-2650 v2 (2.60 GHz, 8C/16T, 20 MB)	N8101-681F
		Xeon E5-2660 v2 Processor Kit Intel® Xeon ® Processor E5-2660 v2 (2.20 GHz, 10C/20T, 25 MB)	N8101-682F
		Xeon E5-2670 v2 Processor Kit Intel® Xeon ® Processor E5-2670 v2 (2.50 GHz, 10C/20T, 25 MB)	N8101-683F
		Xeon E5-2690 v2 Processor Kit Intel® Xeon ® Processor E5-2690 v2 (3 GHz, 10C/20T, 25 MB)	N8101-684F
		Xeon E5-2695 v2 Processor Kit Intel® Xeon ® Processor E5-2695 v2 (2.40 GHz, 12C/24T, 30 MB)	N8101-686F
		Xeon E5-2697 v2 Processor Kit Intel® Xeon ® Processor E5-2697 v2 (2.70 GHz, 12C/24T, 30 MB)	N8101-685F
Heat Sink	**1st**	**Processor Heat Sink** for the first processor	(Standard)
	2nd	**Processor Heat Sink** for the second processor, cooling fan kit included	N8101-554F

NOTE:

- Minimum one processor kit from above must be installed.
- The processors must be identical to configure dual processor system.
- Do not disable Hyper-Threading technology when using processors with a small number of cores and the system requires a lot of IO resources, in order to avoid performance down.

The maximum number of logical processors supported by OS

See the table below for the maximum number of logical processors that you can actually use on your system.

Number of Logical Processors Supported by Operating Systems		Maximum Available Number of Logical Processors
Microsoft Windows Server 2008 Standard Microsoft Windows Server 2008 Enterprise	**32** [1]	**32**
Microsoft Windows Server 2008 Standard (x64) Microsoft Windows Server 2008 Enterprise (x64)	**64** [1]	**48**
Microsoft Windows Server 2008 R2 Standard (x64) Microsoft Windows Server 2008 R2 Enterprise (x64)	**256** [1]	**48**
Microsoft Windows Server 2012 Standard Microsoft Windows Server 2012 Datacenter Microsoft Windows Server 2012 R2 Standard Microsoft Windows Server 2012 R2 Datacenter	**640** [1]	**48**
Red Hat Enterprise Linux 5 Red Hat Enterprise Linux 6	**32**	**32**
Red Hat Enterprise Linux 5 (EM64T) Red Hat Enterprise Linux 6 (x86_64) Red Hat Enterprise Linux 7	**160**	**48**
VMware ESXi 5.0 / 5.1	**160**	**48**
VMware ESXi 5.5	**320**	**48**

[1] The maximum numbers of logical processors when using Hyper-V are below

- Windows Server 2008 : 24
- Windows Server 2008 R2 : 64
- Windows Server 2012, Windows Server 2012 R2 : 320

3 Memory

3.1 Memory Configuration

Refer to the section in accordance with your operating system and memory configuration:

Other than Windows server 2008 Standard

- Independent Channel Configuration: Refer to 3.2.1
- Memory Sparing Configuration: Refer to 3.2.2
- Memory Mirroring / Memory Lockstep Configuration: Refer to 3.2.3

Microsoft Windows 2008 Standard

- Independent Channel Configuration: Refer to 3.3.1
- Memory Sparing Configuration: Refer to 3.3.2

3.2 Other than Windows server 2008 Standard

3.2.1 Independent Channel Configuration

Available slots: 12 per processor

Category		Product Name / Description	Part Number
Unbuffered DIMM (UDIMM)		**8GB DDR3-1600 UNB Memory Kit** 2 x 4GB Unbuffered ECC DIMM, DDR3L-1600(PC3L-12800) **NOTE:** - Up to four sets (eight slots) per processor can be installed - This DIMM does not support x4 SDDC.	N8102-534F
Registered DIMM (RDIMM)	**1600 MHz**	**8GB DDR3-1600 REG Memory Kit** 2 x 4GB Registered ECC DIMM, DDR3L-1600(PC3L-12800)	N8102-537F
		16GB DDR3-1600 REG Memory Kit 2 x 8GB Registered ECC DIMM, DDR3L-1600(PC3L-12800)	N8102-538F
		32GB DDR3-1600 REG Memory Kit 2 x 16GB Registered ECC DIMM, DDR3L-1600(PC3L-12800)	N8102-539F
	1866 MHz	**16GB DDR3-1866 REG Memory Kit** 2 x 8GB Registered ECC DIMM, DDR3-1866(PC3-14900) **NOTE:** - Up to two sets (four slots) per processor can be installed - Memory voltage is set to 1.5V automatically - Not supported with the following processors: E5-2609 v2, E5-2620 v2, E5-2630 v2, E5-2630L v2, and E5-2640 v2	N8102-545F
		32GB DDR3-1866 REG Memory Kit 2 x 16GB Registered ECC DIMM, DDR3-1866(PC3-14900) **NOTE:** - Up to two sets (four slots) per processor can be installed - Memory voltage is set to 1.5V automatically - Not supported with the following processors: E5-2609 v2, E5-2620 v2, E5-2630 v2, E5-2630L v2, and E5-2640 v2	N8102-546F
Load Reduced DIMM (LRDIMM)		**64GB DDR3-1600 LR Memory Kit** 2 x 32GB Load Reduced ECC DIMM, DDR3L-1600(PC3L-12800)	N8102-540F
		128GB DDR3-1333 LR Memory Kit 2 x 64GB Load Reduced ECC DIMM, DDR3L-1333(PC3L-10600)	N8102-541F

NOTE:

- Minimum one memory kit per processor must be installed.
- It is recommended to install memory kits in multiples of two (four identical DIMMs) for quad-channel symmetric memory configurations to increase memory transfer speed.

- When two processors are installed, balance the DIMMs across the two processors.
- Mix configurations of UDIMM/RDIMM(1600MHz)/RDIMM(1866MHz)/LRDIMM are not supported.

3.2.2 Memory Sparing Configuration

Available slots: 12 per processor

Product Name / Description	Part Number
12GB DDR3-1600 REG Memory Kit 3 x 4GB Registered ECC DIMM, DDR3L-1600(PC3L-12800)	N8102-552
24GB DDR3-1600 REG Memory Kit 3 x 8GB Registered ECC DIMM, DDR3L-1600(PC3L-12800)	N8102-553
48GB DDR3-1600 REG Memory Kit 3 x 16GB Registered ECC DIMM, DDR3L-1600(PC3L-12800)	N8102-554

NOTE:

- Minimum one memory kit per processor must be installed.
- The configured memories must be identical.
- When two processors are installed, balance the DIMMs across the two processors.
- The logical memory capacity at the time of memory sparing becomes two-thirds of physical capacity with configurations less than 8GB DIMM and five-sixth physical capacity with configurations more than 16GB DIMM.

3.2.3 Memory Mirroring / Memory Lockstep Configuration

Available slots: 12 per processor

Product Name / Description	Part Number
8GB DDR3-1600 REG Memory Kit 2 x 4GB Registered ECC DIMM, DDR3L-1600(PC3L-12800)	N8102-548
16GB DDR3-1600 REG Memory Kit 2 x 8GB Registered ECC DIMM, DDR3L-1600(PC3L-12800)	N8102-549
32GB DDR3-1600 REG Memory Kit 2 x 16GB Registered ECC DIMM, DDR3L-1600(PC3L-12800)	N8102-550

NOTE:

- Minimum one memory kit per processor must be installed.
- At least 5 GB of memory is required for VMware ESXi™ 5.5.

3.3 Windows Server 2008 Standard

3.3.1 Independent Channel Configuration

Available slots: 1

Product Name / Description	Part Number
4GB DDR3-1600 REG Memory Kit 1 x 4GB Registered ECC DIMM, DDR3L-1600(PC3L-12800)	N8102-582

NOTE:

- Only one Memory Kit can be installed regardless of the number of processors.

3.3.2 Memory Mirroring Configuration

Available slots: 2

Product Name / Description	Part Number
8GB DDR3-1600 REG Memory Kit 2 x 4GB Registered ECC DIMM, DDR3L-1600(PC3L-12800)	N8102-548

NOTE:

- Only one Memory Kit (two DIMMs) can be installed regardless of the number of processors.

Memory Configuration Feature Comparison

See the table below for feature comparisons of memory configurations supported.

	Independent Channel	Memory Sparing	Memory Lockstep	Memory Mirroring
Performance	Best	Better	Better	Good
Data Protection	No	Multiple single bit error protection	No	Multiple single bit and multi bit error protection
Redundancy	No	Partly	No	Fully
Data Correction	ECC, x4 SDDC	ECC, x4 SDDC	ECC, x8 SDDC	ECC, x4 SDDC
Available Memory	Full physical memory	2/3 physical memory (4, 8GB DIMM) 5/6 physical memory (16GB DIMM)	Full physical memory	Half physical memory
Available Memory Channels	4	4	4	4
Notes	-	All DIMMs in the system must be identical.	Paired DIMMs must be identical.	Paired DIMMs must be identical.

Maximum Memory Speed

See the table below for the actual maximum memory transfer speed in Independent Channel / Memory Sparing Configuration.

DDR3 memory speed depends on the type of DIMMs, the native memory bus speed of the memory controller and memory configuration. All memory buses operate at the clock frequency of the DIMM with the lowest frequency.

Processor Type	Populated DIMMs	# of DIMMs per processor	Memory Power Setting	DIMM Speed
E5-2609 v2	UDIMM: 4GB	-	-	1333 MHz
	1600 RDIMM: 4, 8, 16 GB	Up to 8 DIMMs	-	1333 MHz
		10 or more DIMMs	Low (1.35V)	800 MHz
			Normal (1.5V)	1066 MHz
	LRDIMM: 32GB	Up to 8 DIMMs	-	1333 MHz
		10 or more DIMMs	-	1066 MHz
	LRDIMM: 64GB	-	-	1066 MHz
	For Memory Sparing	-	Low (1.35V)	800 MHz
		-	Normal (1.5V)	1066 MHz
E5-2620 v2 E5-2630 v2 E5-2630L v2 E5-2640 v2	UDIMM: 4GB	-	Low (1.35V)	1333 MHz
			Normal (1.5V)	1600 MHz
	1600 RDIMM: 4, 8, 16 GB	Up to 8 DIMMs	Low (1.35V)	1600 MHz
			Normal (1.5V)	1600 MHz
		10 or more DIMMs	Low (1.35V)	800 MHz
			Normal (1.5V)	1066 MHz
	LRDIMM: 32GB	Up to 8 DIMMs	-	1600 MHz
		10 or more DIMMs	-	1066 MHz
	LRDIMM: 64GB	-	-	1066 MHz
	For Memory Sparing	-	Low (1.35V)	800 MHz
		-	Normal (1.5V)	1066 MHz
E5-2637 v2 E5-2650 v2 E5-2660 v2 E5-2670 v2 E5-2690 v2 E5-2695 v2	UDIMM: 4GB	-	Low (1.35V)	1333 MHz
			Normal (1.5V)	1600 MHz
	1600 RDIMM: 4, 8, 16 GB	Up to 8 DIMMs	Low (1.35V)	1600 MHz
			Normal (1.5V)	1600 MHz
		10 or more DIMMs	Low (1.35V)	800 MHz
			Normal (1.5V)	1066 MHz
E5-2697 v2	1866 RDIMM: 8, 16 GB	-	Normal (1.5V)	1866MHz
	LRDIMM: 32GB	Up to 8 DIMMs	-	1600 MHz
		10 or more DIMMs	-	1066 MHz
	LRDIMM: 64GB	-	-	1066 MHz
	For Memory Sparing	-	Low (1.35V)	800 MHz
		-	Normal (1.5V)	1066 MHz

NOTE:

- Memory voltage is set to 1.5V automatically when installing DDR-1866 RDIMMs.

Maximum Available Memory

See the table below for the maximum memory size that you can actually use on your system.

The maximum available memory is less than the maximum physical memory supported by your system because some chipsets require PCI resource space of about 750MB. PCI resource requirements vary depending on the type and the number of PCI cards you are using.

Maximum Memory Size Supported by Operating Systems		Maximum Available Memory
Microsoft Windows Server 2008 Standard [1]	**4 GB**	**4 GB (HW-DEP enabled)** **App. 2 GB(HW-DEP disabled)**
Microsoft Windows Server 2008 Standard (x64) [1] Microsoft Windows Server 2008 R2 Standard [1]	**32 GB**	**32 GB**
Microsoft Windows Server 2008 Enterprise [1]	**64 GB**	**64 GB**
Microsoft Windows Server 2008 Enterprise (x64) [1]	**2 TB**	**1.5 TB**
Microsoft Windows Server 2008 R2 Enterprise [1]	**4 TB**	**1.5 TB**
Microsoft Windows Server 2012 Standard [1] Microsoft Windows Server 2012 Datacenter [1] Microsoft Windows Server 2012 R2 Standard [1] Microsoft Windows Server 2012 R2 Datacenter [1]	**16 GB**	**16 GB**
Red Hat Enterprise Linux 5 Red Hat Enterprise Linux 6	**3 TB**	**1.5 TB**
Red Hat Enterprise Linux 5 (EM64T)	**1 TB**	**1 TB**
Red Hat Enterprise Linux 6 (x86_64) Red Hat Enterprise Linux 7	**3 TB**	**1.5 TB**
VMware ESXi 5.0 / 5.1 [2]	**2 TB**	**1.5 TB**
VMware ESXi 5.5 [2]	**4 TB**	**1.5 TB**

[1] The maximum available memory size of Hyper-V systems are below:
- Windows Server 2008 Standard (x64) and Windows Server 2008 R2 Standard : 32 GB
- Windows Server 2008 Enterprise (x64) and Windows Server 2008 R2 Enterprise : 1TB
- Windows Server 2012, Windows Server 2012 R2:4 TB

[2] Up to 1TB of main memory is available to each virtual machine.

4 Internal Hard Disk Drives

4.1 RAID Configuration

Refer to the section in accordance with your disk from factor and RAID configuration.

Up to six 2.5-inch Drives

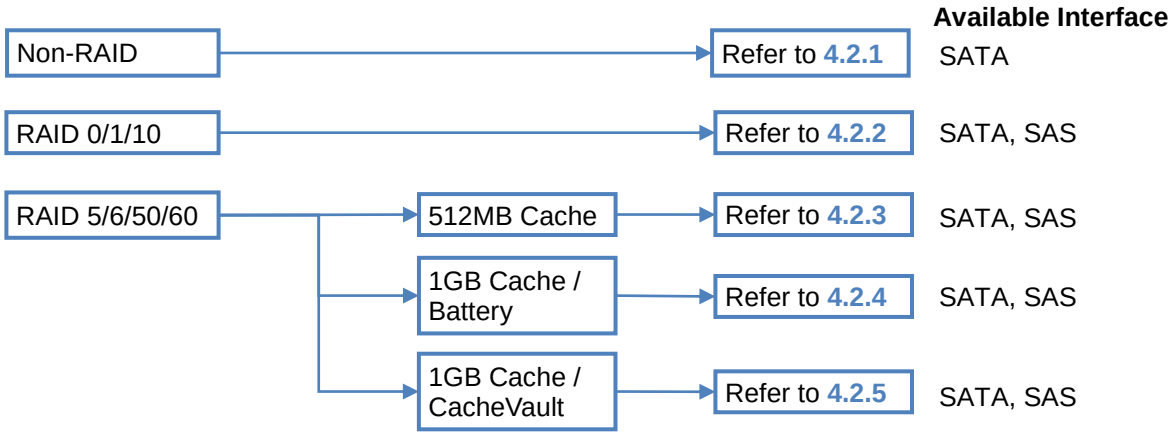

Up to eight 2.5-inch Drives

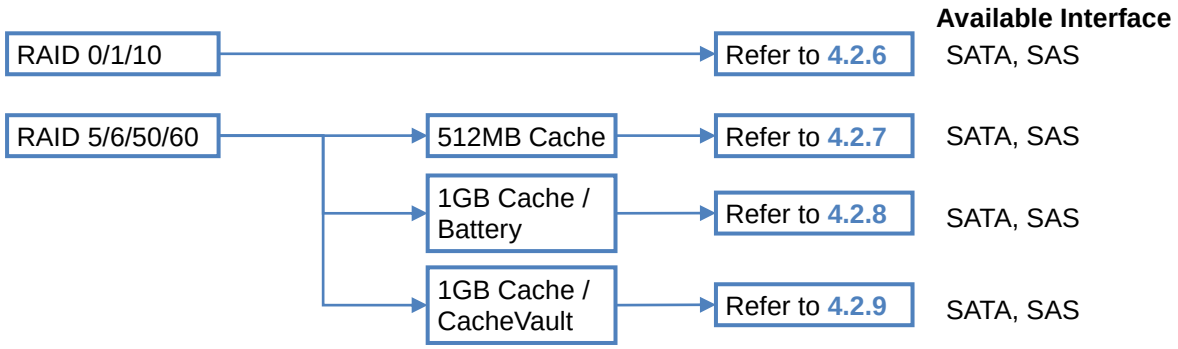

NOTE:

- Up to four hard drives can be installed in the Embedded SATA configuration.
- Hot plug insertion/removal are not supported in the Embedded SATA configuration.
- All drives within a RAID array should be of the same type, capacity and rotation speed.
- To configure a large-capacity RAID array, it is recommended to configure in RAID 6 or RAID 60 in order to minimize the risk of becoming multiple hard drives failure during the RAID rebuilding process.
- Up to two kinds of drives selected from SAS 10K HDDs, SAS 15K HDDs, SATA HDDs and SAS SSDs can be mixed in one system.

4.2 Internal Drive Configuration

4.2.1 Up to four Drives with embedded SATA non-RAID Controller

Category		Product Name / Description	Part Number
Storage Controller		**Embedded SATA Controller** 2 x 6Gb/s SATA, 2 x 3Gb/s SATA	(Standard)
Cable		**Internal SATA Cable** 4 x Single SATA to 1 x mini-SAS	(Standard)
Drive Cage		**2.5-inch Drive Cage** 6 x 2.5-inch Hot-plug hard drive bays	(Standard)
Drive **4 slots available**	**SATA HDD**	**250GB 7.2K Hot Plug 2.5-inch SATA HDD** 1 x 250 GB SATA HDD, 2.5-inch, 6Gb/s, 7,200 rpm	N8150-356
		500GB 7.2K Hot Plug 2.5-inch SATA HDD 1 x 500 GB SATA HDD, 2.5-inch, 6Gb/s, 7,200 rpm	N8150-357
		1TB 7.2K Hot Plug 2.5-inch SATA HDD 1 x 1 TB SATA HDD, 2.5-inch, 6Gb/s, 7,200 rpm	N8150-358

NOTE:

- Hot plug insertion/removal are not supported in the configuration.
- The maximum transfer speed for Slot 2 and Slot 3 is 3 Gb/s.

4.2.2 Up to six Drives with RAID 0/1 Controller with 512 MB Cache

Category		Product Name / Description	Part Number
Storage Controller **Required**		**RAID Controller (512MB, RAID 0/1)** LSI MegaRAID SAS 9272-8i RAID 0/1/10, 512 MB, Int. 8, PCIe 3.0 x8, 6Gb/s	N8103-172
RAID BBU **Recommended**		**RAID Battery Backup Unit** **for LSI MegaRAID SAS 9267-8i/9272-8i**	N8103-153
Cable		**Internal SAS/SATA Cable** two set of 1 x mini-SAS to 4 x Single SATA	(Standard)
Drive Cage		**2.5-inch Drive Cage** 6 x 2.5-inch hot plug hard drive bays	(Standard)
Drive **6 slots available**	**SAS HDD**	**300GB 10K Hot Plug 2.5-inch SAS HDD** 1 x 300 GB SAS HDD, 2.5-inch, 6Gb/s, 10,000 rpm	N8150-301B
		450GB 10K Hot Plug 2.5-inch SAS HDD 1 x 450 GB SAS HDD, 2.5-inch, 6Gb/s, 10,000 rpm	N8150-322B
		600GB 10K Hot Plug 2.5-inch SAS HDD 1 x 600 GB SAS HDD, 2.5-inch, 6Gb/s, 10,000 rpm	N8150-304B
		900GB 10K Hot Plug 2.5-inch SAS HDD 1x 900 GB SAS HDD, 2.5-inch, 6Gb/s, 10,000 rpm	N8150-332B
		1.2TB 10K Hot Plug 2.5-inch SAS HDD 1 x 1.2TB SAS HDD, 2.5-inch, 6Gb/s, 10,000 rpm	N8150-408B
		146.5GB 15K Hot Plug 2.5-inch SAS HDD 1x 146.5 GB SAS HDD, 2.5-inch, 6Gb/s, 15,000 rpm	N8150-303B
		300GB 15K Hot Plug 2.5-inch SAS HDD 1x 300 GB SAS HDD, 2.5-inch, 6Gb/s, 15,000 rpm	N8150-331B
		450GB 15K Hot Plug 2.5-inch SAS HDD 1x 450 GB SAS HDD, 2.5-inch, 6Gb/s, 15,000 rpm	N8150-442
		600GB 15K Hot Plug 2.5-inch SAS HDD 1x 600 GB SAS HDD, 2.5-inch, 6Gb/s, 15,000 rpm	N8150-443
	SATA HDD	**250GB 7.2K Hot Plug 2.5-inch SATA HDD** 1 x 250 GB SATA HDD, 2.5-inch, 6Gb/s, 7,200 rpm	N8150-356
		500GB 7.2K Hot Plug 2.5-inch SATA HDD 1 x 500 GB SATA HDD, 2.5-inch, 6Gb/s, 7,200 rpm	N8150-357
		1TB 7.2K Hot Plug 2.5-inch SATA HDD 1 x 1 TB SATA HDD, 2.5-inch, 6Gb/s, 7,200 rpm	N8150-358
	SAS SSD	**200GB Hot Plug 2.5-inch SAS SSD** 1 x 200 GB SAS SSD, eMLC, 2.5-inch, 6Gb/s	N8150-711
		400GB Hot Plug 2.5-inch SAS SSD 1 x 400 GB SAS SSD, eMLC, 2.5-inch, 6Gb/s	N8150-712

NOTE:

- All drives within a RAID array should be of the same type, capacity and rotation speed.
- Up to two kinds of drives selected from SAS 10K HDDs, SAS 15K HDDs, SATA HDDs and SAS SSDs can be mixed in one system.

4.2.3 Up to six Drives with RAID 5/6 Controller with 512 MB Cache

Category		Product Name / Description	Part Number
Storage Controller Required		**RAID Controller (512MB, RAID 0/1/5/6)** LSI MegaRAID SAS 9272-8i RAID0/1/5/6/10/50/60, 512 MB, Int. 8, PCIe 3.0 x8, 6Gb/s	N8103-173
RAID BBU Recommended		**RAID Battery Backup Unit** for LSI MegaRAID SAS 9267-8i/9272-8i	N8103-153
Cable		**Internal SAS/SATA Cable** two set of 1 x mini-SAS to 4 x Single SATA	(Standard)
Drive Cage		**2.5-inch Drive Cage** 6 x 2.5-inch hot plug hard drive bays	(Standard)
Drive 6 slots available	**SAS HDD**	**300GB 10K Hot Plug 2.5-inch SAS HDD** 1 x 300 GB SAS HDD, 2.5-inch, 6Gb/s, 10,000 rpm	N8150-301B
		450GB 10K Hot Plug 2.5-inch SAS HDD 1 x 450 GB SAS HDD, 2.5-inch, 6Gb/s, 10,000 rpm	N8150-322B
		600GB 10K Hot Plug 2.5-inch SAS HDD 1 x 600 GB SAS HDD, 2.5-inch, 6Gb/s, 10,000 rpm	N8150-304B
		900GB 10K Hot Plug 2.5-inch SAS HDD 1x 900 GB SAS HDD, 2.5-inch, 6Gb/s, 10,000 rpm	N8150-332B
		1.2TB 10K Hot Plug 2.5-inch SAS HDD 1 x 1.2TB SAS HDD, 2.5-inch, 6Gb/s, 10,000 rpm	N8150-408B
		146.5GB 15K Hot Plug 2.5-inch SAS HDD 1x 146.5 GB SAS HDD, 2.5-inch, 6Gb/s, 15,000 rpm	N8150-303B
		300GB 15K Hot Plug 2.5-inch SAS HDD 1x 300 GB SAS HDD, 2.5-inch, 6Gb/s, 15,000 rpm	N8150-331B
		450GB 15K Hot Plug 2.5-inch SAS HDD 1x 450 GB SAS HDD, 2.5-inch, 6Gb/s, 15,000 rpm	N8150-442
		600GB 15K Hot Plug 2.5-inch SAS HDD 1x 600 GB SAS HDD, 2.5-inch, 6Gb/s, 15,000 rpm	N8150-443
	SATA HDD	**250GB 7.2K Hot Plug 2.5-inch SATA HDD** 1 x 250 GB SATA HDD, 2.5-inch, 6Gb/s, 7,200 rpm	N8150-356
		500GB 7.2K Hot Plug 2.5-inch SATA HDD 1 x 500 GB SATA HDD, 2.5-inch, 6Gb/s, 7,200 rpm	N8150-357
		1TB 7.2K Hot Plug 2.5-inch SATA HDD 1 x 1 TB SATA HDD, 2.5-inch, 6Gb/s, 7,200 rpm	N8150-358
	SAS SSD	**200GB Hot Plug 2.5-inch SAS SSD** 1 x 200 GB SAS SSD, eMLC, 2.5-inch, 6Gb/s	N8150-711
		400GB Hot Plug 2.5-inch SAS SSD 1 x 400 GB SAS SSD, eMLC, 2.5-inch, 6Gb/s	N8150-712

NOTE:

- All hard drives within a RAID array should be of the same capacity and rotation speed.
- Up to two kinds of drives selected from SAS 10K HDDs, SAS 15K HDDs, SATA HDDs and SAS SSDs can be mixed in one system.
- To configure a large-capacity RAID array, it is recommended to configure in RAID 6 or RAID 60 in order to minimize the risk of becoming multiple hard drives failure during the RAID rebuilding process.

4.2.4 Up to six Drives with RAID 5/6 Controller with 1 GB Cache/Battery

Category		Product Name / Description	Part Number
Storage Controller **Required**		**RAID Controller (1GB, RAID 0/1/5/6)** LSI MegaRAID SAS 9272-8i RAID 0/1/5/6/10/50/60, 1 GB, Int. 8, PCIe 3.0 x8, 6Gb/s	N8103-174
RAID BBU **Recommended**		RAID Battery Backup Unit for LSI MegaRAID SAS 9267-8i/9272-8i	N8103-153
SSD Caching **Recommended**		**MegaRAID CacheCade** for LSI MegaRAID SAS **NOTE:** - SSD used for cache is required - The SSD capacity which can be used as read cache is up to 512 GB.	N8103-156
Cable		**Internal SAS/SATA Cable** two set of 1 x mini-SAS to 4 x Single SATA	(Standard)
Drive Cage		**2.5-inch Drive Cage** 6 x 2.5-inch hot plug drive bays	(Standard)
Drive **6 slots available**	**SAS HDD**	**300GB 10K Hot Plug 2.5-inch SAS HDD** 1 x 300 GB SAS HDD, 2.5-inch, 6Gb/s, 10,000 rpm	N8150-301B
		450GB 10K Hot Plug 2.5-inch SAS HDD 1 x 450 GB SAS HDD, 2.5-inch, 6Gb/s, 10,000 rpm	N8150-322B
		600GB 10K Hot Plug 2.5-inch SAS HDD 1 x 600 GB SAS HDD, 2.5-inch, 6Gb/s, 10,000 rpm	N8150-304B
		900GB 10K Hot Plug 2.5-inch SAS HDD 1x 900 GB SAS HDD, 2.5-inch, 6Gb/s, 10,000 rpm	N8150-332B
		1.2TB 10K Hot Plug 2.5-inch SAS HDD 1 x 1.2TB SAS HDD, 2.5-inch, 6Gb/s, 10,000 rpm	N8150-408B
		146.5GB 15K Hot Plug 2.5-inch SAS HDD 1x 146.5 GB SAS HDD, 2.5-inch, 6Gb/s, 15,000 rpm	N8150-303B
		300GB 15K Hot Plug 2.5-inch SAS HDD 1x 300 GB SAS HDD, 2.5-inch, 6Gb/s, 15,000 rpm	N8150-331B
		450GB 15K Hot Plug 2.5-inch SAS HDD 1x 450 GB SAS HDD, 2.5-inch, 6Gb/s, 15,000 rpm	N8150-442
		600GB 15K Hot Plug 2.5-inch SAS HDD 1x 600 GB SAS HDD, 2.5-inch, 6Gb/s, 15,000 rpm	N8150-443
	SATA HDD	**250GB 7.2K Hot Plug 2.5-inch SATA HDD** 1 x 250 GB SATA HDD, 2.5-inch, 6Gb/s, 7,200 rpm	N8150-356
		500GB 7.2K Hot Plug 2.5-inch SATA HDD 1 x 500 GB SATA HDD, 2.5-inch, 6Gb/s, 7,200 rpm	N8150-357
		1TB 7.2K Hot Plug 2.5-inch SATA HDD 1 x 1 TB SATA HDD, 2.5-inch, 6Gb/s, 7,200 rpm	N8150-358
	SAS SSD	**200GB Hot Plug 2.5-inch SAS SSD** 1 x 200 GB SAS SSD, eMLC, 2.5-inch, 6Gb/s	N8150-711
		400GB Hot Plug 2.5-inch SAS SSD 1 x 400 GB SAS SSD, eMLC, 2.5-inch, 6Gb/s	N8150-712

NOTE:

- All hard drives within a RAID array should be of the same capacity and rotation speed.
- Up to two kinds of drives selected from SAS 10K HDDs, SAS 15K HDDs, SATA HDDs and SAS SSDs can be mixed in one system.
- To configure a large-capacity RAID array, it is recommended to configure in RAID 6 or RAID 60 in order to minimize the risk of becoming multiple hard drives failure during the RAID rebuilding process.

4.2.5 Up to six Drives with RAID 5/6 Controller with 1 GB Cache/CacheVault

Category		Product Name / Description	Part Number
Storage Controller **Required**		**RAID Controller (1GB, RAID 0/1/5/6)** LSI MegaRAID SAS 9270CV-8i (with CV) RAID0/1/5/6/10/50/60, 1GB Cache, Int. 8ports, PCIe 3.0(x8), 6Gb/s, flash cache protection modules included	N8103-168
SSD Caching **Recommended**		**MegaRAID CacheCade** for LSI MegaRAID SAS **NOTE:** - SSD used for cache is required - The SSD capacity which can be used as read cache is up to 512 GB.	N8103-156
Cable		**Internal SAS/SATA Cable** two set of 1 x mini-SAS to 4 x Single SATA	(Standard)
Drive Cage		**2.5-inch Drive Cage** 6 x 2.5-inch hot plug hard drive bays	(Standard)
Drive **6 slots available**	**SAS HDD**	**300GB 10K Hot Plug 2.5-inch SAS HDD** 1 x 300 GB SAS HDD, 2.5-inch, 6Gb/s, 10,000 rpm	N8150-301B
		450GB 10K Hot Plug 2.5-inch SAS HDD 1 x 450 GB SAS HDD, 2.5-inch, 6Gb/s, 10,000 rpm	N8150-322B
		600GB 10K Hot Plug 2.5-inch SAS HDD 1 x 600 GB SAS HDD, 2.5-inch, 6Gb/s, 10,000 rpm	N8150-304B
		900GB 10K Hot Plug 2.5-inch SAS HDD 1x 900 GB SAS HDD, 2.5-inch, 6Gb/s, 10,000 rpm	N8150-332B
		1.2TB 10K Hot Plug 2.5-inch SAS HDD 1 x 1.2TB SAS HDD, 2.5-inch, 6Gb/s, 10,000 rpm	N8150-408B
		146.5GB 15K Hot Plug 2.5-inch SAS HDD 1x 146.5 GB SAS HDD, 2.5-inch, 6Gb/s, 15,000 rpm	N8150-303B
		300GB 15K Hot Plug 2.5-inch SAS HDD 1x 300 GB SAS HDD, 2.5-inch, 6Gb/s, 15,000 rpm	N8150-331B
		450GB 15K Hot Plug 2.5-inch SAS HDD 1x 450 GB SAS HDD, 2.5-inch, 6Gb/s, 15,000 rpm	N8150-442
		600GB 15K Hot Plug 2.5-inch SAS HDD 1x 600 GB SAS HDD, 2.5-inch, 6Gb/s, 15,000 rpm	N8150-443
	SATA HDD	**250GB 7.2K Hot Plug 2.5-inch SATA HDD** 1 x 250 GB SATA HDD, 2.5-inch, 6Gb/s, 7,200 rpm	N8150-356
		500GB 7.2K Hot Plug 2.5-inch SATA HDD 1 x 500 GB SATA HDD, 2.5-inch, 6Gb/s, 7,200 rpm	N8150-357
		1TB 7.2K Hot Plug 2.5-inch SATA HDD 1 x 1 TB SATA HDD, 2.5-inch, 6Gb/s, 7,200 rpm	N8150-358
	SAS SSD	**200GB Hot Plug 2.5-inch SAS SSD** 1 x 200 GB SAS SSD, eMLC, 2.5-inch, 6Gb/s	N8150-711
		400GB Hot Plug 2.5-inch SAS SSD 1 x 400 GB SAS SSD, eMLC, 2.5-inch, 6Gb/s	N8150-712

NOTE:

- All hard drives within a RAID array should be of the same capacity and rotation speed.
- Up to two kinds of drives selected from SAS 10K HDDs, SAS 15K HDDs, SATA HDDs and SAS SSDs can be mixed in one system.
- To configure a large-capacity RAID array, it is recommended to configure in RAID 6 or RAID 60 in order to minimize the risk of becoming multiple hard drives failure during the RAID rebuilding process.

4.2.6 Up to eight Drives with RAID 0/1 Controller with 512 MB Cache

Category		Product Name / Description	Part Number
Storage Controller Required		**RAID Controller (512MB, RAID 0/1)** LSI MegaRAID SAS 9272-8i RAID 0/1/10, 512MB, Int. 8, PCIe 3.0 x8, 6Gb/s	N8103-172
RAID BBU Recommended		**RAID Battery Backup Unit** for LSI MegaRAID SAS 9267-8i/9272-8i	N8103-153
Cable		**Internal SAS/SATA Cable** two set of 1 x mini-SAS to 4 x Single SATA	(Standard)
Drive Cage		**2.5-inch Drive Cage** 6 x 2.5-inch hot plug hard drive bays	(Standard)
Optional Drive Cage Required		**2.5-inch Hot Plug Drive Cage Kit** 2 x 2.5-inch hot plug hard drive bays	N8154-41
Drive 8 slots available	**SAS HDD**	**300GB 10K Hot Plug 2.5-inch SAS HDD** 1 x 300 GB SAS HDD, 2.5-inch, 6Gb/s, 10,000 rpm	N8150-301B
		450GB 10K Hot Plug 2.5-inch SAS HDD 1 x 450 GB SAS HDD, 2.5-inch, 6Gb/s, 10,000 rpm	N8150-322B
		600GB 10K Hot Plug 2.5-inch SAS HDD 1 x 600 GB SAS HDD, 2.5-inch, 6Gb/s, 10,000 rpm	N8150-304B
		900GB 10K Hot Plug 2.5-inch SAS HDD 1x 900 GB SAS HDD, 2.5-inch, 6Gb/s, 10,000 rpm	N8150-332B
		1.2TB 10K Hot Plug 2.5-inch SAS HDD 1 x 1.2TB SAS HDD, 2.5-inch, 6Gb/s, 10,000 rpm	N8150-408B
		146.5GB 15K Hot Plug 2.5-inch SAS HDD 1x 146.5 GB SAS HDD, 2.5-inch, 6Gb/s, 15,000 rpm	N8150-303B
		300GB 15K Hot Plug 2.5-inch SAS HDD 1x 300 GB SAS HDD, 2.5-inch, 6Gb/s, 15,000 rpm	N8150-331B
		450GB 15K Hot Plug 2.5-inch SAS HDD 1x 450 GB SAS HDD, 2.5-inch, 6Gb/s, 15,000 rpm	N8150-442
		600GB 15K Hot Plug 2.5-inch SAS HDD 1x 600 GB SAS HDD, 2.5-inch, 6Gb/s, 15,000 rpm	N8150-443
	SATA HDD	**250GB 7.2K Hot Plug 2.5-inch SATA HDD** 1 x 250 GB SATA HDD, 2.5-inch, 6Gb/s, 7,200 rpm	N8150-356
		500GB 7.2K Hot Plug 2.5-inch SATA HDD 1 x 500 GB SATA HDD, 2.5-inch, 6Gb/s, 7,200 rpm	N8150-357
		1TB 7.2K Hot Plug 2.5-inch SATA HDD 1 x 1 TB SATA HDD, 2.5-inch, 6Gb/s, 7,200 rpm	N8150-358
	SAS SSD	**200GB Hot Plug 2.5-inch SAS SSD** 1 x 200 GB SAS SSD, eMLC, 2.5-inch, 6Gb/s	N8150-711
		400GB Hot Plug 2.5-inch SAS SSD 1 x 400 GB SAS SSD, eMLC, 2.5-inch, 6Gb/s	N8150-712

NOTE:

- All hard drives within a RAID array should be of the same capacity and rotation speed.
- Up to two kinds of drives selected from SAS 10K HDDs, SAS 15K HDDs, SATA HDDs and SAS SSDs can be mixed in one system.
- To configure a large-capacity RAID array, it is recommended to configure in RAID 6 or RAID 60 in order to minimize the risk of becoming multiple hard drives failure during the RAID rebuilding process.

4.2.7 Up to eight Drives with RAID 5/6 Controller with 512 MB Cache

Category		Product Name / Description	Part Number
Storage Controller Required		**RAID Controller (512MB, RAID 0/1/5/6)** LSI MegaRAID SAS 9272-8i RAID0/1/5/6/10/50/60, 512MB, Int. 8, PCIe 3.0 x8, 6Gb/s	N8103-173
RAID BBU Recommended		**RAID Battery Backup Unit** for LSI MegaRAID SAS9267-8i/9272-8i	N8103-153
Cable		**Internal SAS/SATA Cable** two set of 1 x mini-SAS to 4 x Single SATA	(Standard)
Drive Cage		**2.5-inch Drive Cage** 6 x 2.5-inch hot plug hard drive bays	(Standard)
Optional Drive Cage Required		**2.5-inch Hot Plug Drive Cage Kit** 2 x 2.5-inch hot plug hard drive bays	N8154-41
Drive 8 slots available	**SAS HDD**	**300GB 10K Hot Plug 2.5-inch SAS HDD** 1 x 300 GB SAS HDD, 2.5-inch, 6Gb/s, 10,000 rpm	N8150-301B
		450GB 10K Hot Plug 2.5-inch SAS HDD 1 x 450 GB SAS HDD, 2.5-inch, 6Gb/s, 10,000 rpm	N8150-322B
		600GB 10K Hot Plug 2.5-inch SAS HDD 1 x 600 GB SAS HDD, 2.5-inch, 6Gb/s, 10,000 rpm	N8150-304B
		900GB 10K Hot Plug 2.5-inch SAS HDD 1x 900 GB SAS HDD, 2.5-inch, 6Gb/s, 10,000 rpm	N8150-332B
		1.2TB 10K Hot Plug 2.5-inch SAS HDD 1 x 1.2TB SAS HDD, 2.5-inch, 6Gb/s, 10,000 rpm	N8150-408B
		146.5GB 15K Hot Plug 2.5-inch SAS HDD 1x 146.5 GB SAS HDD, 2.5-inch, 6Gb/s, 15,000 rpm	N8150-303B
		300GB 15K Hot Plug 2.5-inch SAS HDD 1x 300 GB SAS HDD, 2.5-inch, 6Gb/s, 15,000 rpm	N8150-331B
		450GB 15K Hot Plug 2.5-inch SAS HDD 1x 450 GB SAS HDD, 2.5-inch, 6Gb/s, 15,000 rpm	N8150-442
		600GB 15K Hot Plug 2.5-inch SAS HDD 1x 600 GB SAS HDD, 2.5-inch, 6Gb/s, 15,000 rpm	N8150-443
	SATA HDD	**250GB 7.2K Hot Plug 2.5-inch SATA HDD** 1 x 250 GB SATA HDD, 2.5-inch, 6Gb/s, 7,200 rpm	N8150-356
		500GB 7.2K Hot Plug 2.5-inch SATA HDD 1 x 500 GB SATA HDD, 2.5-inch, 6Gb/s, 7,200 rpm	N8150-357
		1TB 7.2K Hot Plug 2.5-inch SATA HDD 1 x 1 TB SATA HDD, 2.5-inch, 6Gb/s, 7,200 rpm	N8150-358
	SAS SSD	**200GB Hot Plug 2.5-inch SAS SSD** 1 x 200 GB SAS SSD, eMLC, 2.5-inch, 6Gb/s	N8150-711
		400GB Hot Plug 2.5-inch SAS SSD 1 x 400 GB SAS SSD, eMLC, 2.5-inch, 6Gb/s	N8150-712

NOTE:

- All hard drives within a RAID array should be of the same capacity and rotation speed.
- Up to two kinds of drives selected from SAS 10K HDDs, SAS 15K HDDs, SATA HDDs and SAS SSDs can be mixed in one system.
- To configure a large-capacity RAID array, it is recommended to configure in RAID 6 or RAID 60 in order to minimize the risk of becoming multiple hard drives failure during the RAID rebuilding process.

4.2.8 Up to eight Drives with RAID 5/6 Controller with 1 GB Cache/Battery

Category		Product Name / Description	Part Number
Storage Controller Required		**RAID Controller (1GB, RAID 0/1/5/6)** LSI MegaRAID SAS 9272-8i RAID 0/1/5/6/10/50/60, 1 GB, Int. 8, PCIe 3.0 x8, 6Gb/s	N8103-174
RAID BBU Recommended		**RAID Battery Backup Unit** for LSI MegaRAID SAS 9267-8i/9272-8i	N8103-153
SSD Caching Recommended		**MegaRAID CacheCade** for LSI MegaRAID SAS NOTE: - SSD used for cache is required - The SSD capacity which can be used as read cache is up to 512 GB.	N8103-156
Cable		**Internal SAS/SATA Cable** two set of 1 x mini-SAS to 4 x Single SATA	(Standard)
Drive Cage		**2.5-inch Drive Cage** 6 x 2.5-inch hot plug hard drive bays	(Standard)
Optional Drive Cage Required		**2.5-inch Hot Plug Drive Cage Kit** 2 x 2.5-inch hot plug hard drive bays	N8154-41
Drive 8 slots available	**SAS HDD**	**300GB 10K Hot Plug 2.5-inch SAS HDD** 1 x 300 GB SAS HDD, 2.5-inch, 6Gb/s, 10,000 rpm	N8150-301B
		450GB 10K Hot Plug 2.5-inch SAS HDD 1 x 450 GB SAS HDD, 2.5-inch, 6Gb/s, 10,000 rpm	N8150-322B
		600GB 10K Hot Plug 2.5-inch SAS HDD 1 x 600 GB SAS HDD, 2.5-inch, 6Gb/s, 10,000 rpm	N8150-304B
		900GB 10K Hot Plug 2.5-inch SAS HDD 1x 900 GB SAS HDD, 2.5-inch, 6Gb/s, 10,000 rpm	N8150-332B
		1.2TB 10K Hot Plug 2.5-inch SAS HDD 1 x 1.2TB SAS HDD, 2.5-inch, 6Gb/s, 10,000 rpm	N8150-408B
		146.5GB 15K Hot Plug 2.5-inch SAS HDD 1x 146.5 GB SAS HDD, 2.5-inch, 6Gb/s, 15,000 rpm	N8150-303B
		300GB 15K Hot Plug 2.5-inch SAS HDD 1x 300 GB SAS HDD, 2.5-inch, 6Gb/s, 15,000 rpm	N8150-331B
		450GB 15K Hot Plug 2.5-inch SAS HDD 1x 450 GB SAS HDD, 2.5-inch, 6Gb/s, 15,000 rpm	N8150-442
		600GB 15K Hot Plug 2.5-inch SAS HDD 1x 600 GB SAS HDD, 2.5-inch, 6Gb/s, 15,000 rpm	N8150-443
	SATA HDD	**250GB 7.2K Hot Plug 2.5-inch SATA HDD** 1 x 250 GB SATA HDD, 2.5-inch, 6Gb/s, 7,200 rpm	N8150-356
		500GB 7.2K Hot Plug 2.5-inch SATA HDD 1 x 500 GB SATA HDD, 2.5-inch, 6Gb/s, 7,200 rpm	N8150-357
		1TB 7.2K Hot Plug 2.5-inch SATA HDD 1 x 1 TB SATA HDD, 2.5-inch, 6Gb/s, 7,200 rpm	N8150-358
	SAS SSD	**200GB Hot Plug 2.5-inch SAS SSD** 1 x 200 GB SAS SSD, eMLC, 2.5-inch, 6Gb/s	N8150-711
		400GB Hot Plug 2.5-inch SAS SSD 1 x 400 GB SAS SSD, eMLC, 2.5-inch, 6Gb/s	N8150-712

NOTE:

- All hard drives within a RAID array should be of the same capacity and rotation speed.
- Up to two kinds of drives selected from SAS 10K HDDs, SAS 15K HDDs, SATA HDDs and SAS SSDs can be mixed in one system.
- To configure a large-capacity RAID array, it is recommended to configure in RAID 6 or RAID 60 in order to minimize the risk of becoming multiple hard drives failure during the RAID rebuilding process.

4.2.9 Up to eight Drives with RAID 5/6 Controller with 1 GB Cache/CacheVault

Category		Product Name / Description	Part Number
Storage Controller Required		**RAID Controller (1GB, RAID 0/1/5/6)** LSI MegaRAID SAS 9270CV-8i (with CV) RAID0/1/5/6/10/50/60, 1GB Cache, Int. 8ports, PCIe 3.0(x8), 6Gb/s, flash cache protection modules included	N8103-168
SSD Caching Recommended		**MegaRAID CacheCade** for LSI MegaRAID SAS NOTE: - SSD used for cache is required - The SSD capacity which can be used as read cache is up to 512 GB.	N8103-156
Cable		**Internal SAS/SATA Cable** two set of 1 x mini-SAS to 4 x Single SATA	(Standard)
Drive Cage		**2.5-inch Drive Cage** 6 x 2.5-inch hot plug hard drive bays	(Standard)
Optional Drive Cage Required		**2.5-inch Hot Plug Drive Cage Kit** 2 x 2.5-inch hot plug hard drive bays	N8154-41
Drive 8 slots available	**SAS HDD**	**300GB 10K Hot Plug 2.5-inch SAS HDD** 1 x 300 GB SAS HDD, 2.5-inch, 6Gb/s, 10,000 rpm	N8150-301B
		450GB 10K Hot Plug 2.5-inch SAS HDD 1 x 450 GB SAS HDD, 2.5-inch, 6Gb/s, 10,000 rpm	N8150-322B
		600GB 10K Hot Plug 2.5-inch SAS HDD 1 x 600 GB SAS HDD, 2.5-inch, 6Gb/s, 10,000 rpm	N8150-304B
		900GB 10K Hot Plug 2.5-inch SAS HDD 1x 900 GB SAS HDD, 2.5-inch, 6Gb/s, 10,000 rpm	N8150-332B
		1.2TB 10K Hot Plug 2.5-inch SAS HDD 1 x 1.2TB SAS HDD, 2.5-inch, 6Gb/s, 10,000 rpm	N8150-408B
		146.5GB 15K Hot Plug 2.5-inch SAS HDD 1x 146.5 GB SAS HDD, 2.5-inch, 6Gb/s, 15,000 rpm	N8150-303B
		300GB 15K Hot Plug 2.5-inch SAS HDD 1x 300 GB SAS HDD, 2.5-inch, 6Gb/s, 15,000 rpm	N8150-331B
		450GB 15K Hot Plug 2.5-inch SAS HDD 1x 450 GB SAS HDD, 2.5-inch, 6Gb/s, 15,000 rpm	N8150-442
		600GB 15K Hot Plug 2.5-inch SAS HDD 1x 600 GB SAS HDD, 2.5-inch, 6Gb/s, 15,000 rpm	N8150-443
	SATA HDD	**250GB 7.2K Hot Plug 2.5-inch SATA HDD** 1 x 250 GB SATA HDD, 2.5-inch, 6Gb/s, 7,200 rpm	N8150-356
		500GB 7.2K Hot Plug 2.5-inch SATA HDD 1 x 500 GB SATA HDD, 2.5-inch, 6Gb/s, 7,200 rpm	N8150-357
		1TB 7.2K Hot Plug 2.5-inch SATA HDD 1 x 1 TB SATA HDD, 2.5-inch, 6Gb/s, 7,200 rpm	N8150-358
	SAS SSD	**200GB Hot Plug 2.5-inch SAS SSD** 1 x 200 GB SAS SSD, eMLC, 2.5-inch, 6Gb/s	N8150-711
		400GB Hot Plug 2.5-inch SAS SSD 1 x 400 GB SAS SSD, eMLC, 2.5-inch, 6Gb/s	N8150-712

NOTE:

- All hard drives within a RAID array should be of the same capacity and rotation speed.
- Up to two kinds of drives selected from SAS 10K HDDs, SAS 15K HDDs, SATA HDDs and SAS SSDs can be mixed in one system.
- To configure a large-capacity RAID array, it is recommended to configure in RAID 6 or RAID 60 in order to minimize the risk of becoming multiple hard drives failure during the RAID rebuilding process.

5 Optical Drive

Category	Product Name / Description	Part Number
Internal **1 slot available**	**Internal Slim DVD-ROM drive** Slim DVD-ROM drive DVD read speed: 8x (DVD-ROM / DVD-R / DVD-RW) CD read speed: 24x (CD-ROM / CD-R/RW)	N8151-122
	Internal DVD Super Multi Drive Slim DVD Super Multi drive, not including writing software DVD Read speed: 8x (DVD-R / DVD-RW / DVD-R DL / DVD+R / DVD+RW / DVD+R DL / DVD-ROM) DVD-RAM read speed: 5x CD read speed: 24x (CD-ROM / CD-R/RW)	N8151-107F
External	**External DVD-ROM drive** DVD-ROM drive, Bus powered, 1.2 A required DVD Read speed: 4x (DVD-ROM / DVD-R / DVD-RW) CD read speed: 24x (CD-ROM / CD-R/RW)	N8160-91

NOTE:

- Up to 1 optical drive can be connected.
- N8154-41 2.5-inch Drive Cage cannot be installed when an internal optical drive is installed.

6 PCI Card

Please refer to **Supported PCI Cards and Installable Slots** with regard to the position of PCI slot which can mount PCI card supported.

6.1 Network Interface Controller

Category		Product Name / Description	Part Number
Riser	**1GbE**	**Dual Port 1000BASE-T Riser Card** Broadcom® BCM5718 Gigabit Ethernet Controller PCIe 2.0 x8	N8104-135
	10GbE	**Dual Port 10GBASE-T Riser Card** Broadcom® BCM57810 Converged Controller PCIe 2.0 x8 **NOTE**: - Jumbo frame is not supported on Redhat Enterprise Linux 6 (x86) operating systems.	N8104-136
		Dual Port 10GBASE SFP+ Riser Card Broadcom® BCM57810 Converged Controller PCIe 3.0 x8 **NOTE**: - N8104-129 SFP+ Module is required to connect with an optical cable. - Up to two SFP+ Modules can be installed. - Supports up to three adapters of 10Gb Network Adapter on any supported operating systems, excluding 32 bit operating system. - Up to two 10Gb Network Adapter on Windows Server 2008(x86) and Red Hat Enterprise Linux 5(x86), up to one 10G Network Adapter on Red Hat Enterprise Linux 6(x86). - Jumbo frame is not supported on Redhat Enterprise Linux 6 (x86) operating systems.	N8104-137
Adapter	**1GbE**	**1000BASE-T Adapter** Broadcom ® BCM5718 Gigabit Ethernet Controller PCIe 2.0 x1	N8104-138
		Dual Port 1000BASE-T Adapter Broadcom ® BCM5718 Gigabit Ethernet Controller PCIe 2.0 x1	N8104-132
		Dual Port 1000BASE-T Adapter Intel® 82580 Gigabit Ethernet Controller PCIe 2.0 x4	N8104-145
		Quad Port 1000BASE-T Adapter Broadcom ® BCM5719 Gigabit Ethernet Controller PCIe 2.0 x4 NOTE**:** - Network cables with RJ-45 plug covers cannot be used.	N8104-133
	10GbE	**10GBASE Adapter (SFP+/2ch)** Broadcom NetXtreme II BCM957711 10G SFP+ Dual Port Network Interface Card PCIe 2.0 x8 **NOTE**: - N8104-129 SFP+ Module is required to connect with an optical cable. - Up to 2 SFP+ Modules can be installed. - Supports up to three adapters of 10Gb Network Adapter on any supported operating systems, excluding 32 bit operating system. - Up to two 10Gb Network Adapter on Windows Server 2008(x86) and Red Hat Enterprise Linux 5(x86), up to one 10G Network Adapter on Red Hat Enterprise Linux 6(x86).	N8104-128

	Dual Port 10GBASE SFP+ Adapter Intel 82599ES, 10G SFP+ Dual Port Network Interface Card PCIe 2.0 x8 **NOTE**: - N8104-129 SFP+ Module is required to connect with an optical cable. - Up to 2 SFP+ Modules can be installed. - Supports up to three adapters of 10Gb Network Adapter on any supported operating systems, excluding 32 bit operating system. - Up to two 10Gb Network Adapter on Windows Server 2008(x86) and Red Hat Enterprise Linux 5(x86), up to one 10G Network Adapter on Red Hat Enterprise Linux 6(x86).	N8104-148
	10GBASE Adapter (SFP+/2ch) Broadcom NetXtreme II BCM957711 10G SFP+ Dual Port Network Interface Card PCIe 2.0 x8 **NOTE**: - Up to one adapter only can be installed in a configuration with E5-2609 v2. - N8104-129 SFP+ Module is required to connect with an optical cable. - Up to 2 SFP+ Modules can be installed. - Supports up to three adapters of 10Gb Network Adapter on any supported operating systems, excluding 32 bit operating system. - Up to two 10Gb Network Adapter on Windows Server 2008(x86) and Red Hat Enterprise Linux 5(x86), up to one 10G Network Adapter on Red Hat Enterprise Linux 6(x86). - The latest driver is required for Window Server 2008 and Windows Server 2008 R2.	N8104-149
	Dual Port 10GBASE-T Adapter Intel X540-BT2 PCIe 2.0(x8)	N8104-153
SFP+ Module	**SFP+ Module (10G-SR)** 1 x SFP+ Module for N8104-128/-137/-148/-149	N8104-129

NOTE:

- Supports up to two 10Gb Network Adapter on Windows Server 2008(x86) and Red Hat Enterprise Linux 5(x86), and up to one on Red Hat Enterprise Linux 6(x86). For other operating systems, up to three 10Gb adapters can be installed.
- Network performance may be reduced depending on the applications and memory performance when three or more 10Gb Network Adapters are installed.

NIC Teaming feature – NIC Teaming and bonding features

See the table below for supported network interfaces and OS combinations.

Windows Server 2008 support BASP (Broadcom Advanced Server Program) or Intel PROSet teaming while Windows Server 2012 and Linux support teaming with bonding function supported by OS.

Network Interface	Team	Operating Systems
1GbE NIC Embedded 1GbE NIC and N8104-135/-138/-132/-133	Up to four teams per one system Up to four ports per one team	Windows Server 2008 Windows Server 2008 R2 Windows Server 2012 Windows Server 2012 R2 Red Hat Enterprise Linux 5.9 or later Red Hat Enterprise Linux 6.4 or later Red Hat Enterprise Linux 7.0 or later
1GbE NIC	Up to four teams per one system	Windows Server 2008

N8104-145	Up to four ports per one team	Windows Server 2008 R2
10GbE NIC N8104-128/137	Up to three teams per one system Up to four ports per one team	Windows Server 2008 Windows Server 2008 R2 Windows Server 2012 Windows Server 2012 R2 Red Hat Enterprise Linux 5.9 or later Red Hat Enterprise Linux 6.4 or later Red Hat Enterprise Linux 7.0 or later
10GbE NIC N8104-149		Windows Server 2008(x86) Windows Server 2008 R2 Windows Server 2012 Windows Server 2012 R2 Red Hat Enterprise Linux 6.5 or later
10GbE NIC N8104-136	Up to one teams per one system Up to two ports per one team	Windows Server 2008 Windows Server 2008 R2 Windows Server 2012 Windows Server 2012 R2 Red Hat Enterprise Linux 5.9 or later Red Hat Enterprise Linux 6.4 or later Red Hat Enterprise Linux 7.0 or later

NOTE:

- NIC Teaming feature is not supported on iSCSI interfaces.
- The network interfaces for teaming must be the same.
- When 10GbE and 1GbE NIC teamings are mixed, the teams must be up to four per one system.

Using iSCSI

See the table below for supported network interfaces and operating system combinations.

Category	Network Interface	Operating Systems
1GbE	Embedded 1GbE NIC	Windows Server 2008 R2, Windows Server 2012, Windows Server 2012 R2, Red Hat Enterprise Linux 5, Red Hat Enterprise Linux 6, VMware
	N8104-138	Windows Server 2008 R2, Windows Server 2012, Windows Server 2012 R2, RHEL5, RHEL6, VMware
	N8104-132	Windows Server 2008 R2, Windows Server 2012, Windows Server 2012 R2, Red Hat Enterprise Linux 5, Red Hat Enterprise Linux 6, VMware
	N8104-133	Windows Server 2008 R2, Windows Server 2012, Windows Server 2012 R2, Red Hat Enterprise Linux 5, Red Hat Enterprise Linux 6, VMware
	N8104-135	Windows Server 2008 R2, Windows Server 2012, Windows Server 2012 R2, Red Hat Enterprise Linux 5, Red Hat Enterprise Linux 6, VMware
10GbE	N8104-128	Windows Server 2008, Windows Server 2008 R2, Windows Server 2012, Windows Server 2012 R2, Red Hat Enterprise Linux 5, Red Hat Enterprise Linux 6, VMware
	N8104-137	Windows Server 2008 R2, Windows Server 2012, Windows Server 2012 R2, Red Hat Enterprise Linux 5, Red Hat Enterprise Linux 6, VMware
	N8104-149	Windows Server 2008 R2 / Windows Server 2012 / Windows Server 2012 R2 / Red Hat Enterprise Linux 6.5 or later / VMware

NOTE:

- NIC Teaming feature is not supported on iSCSI interfaces.

6.2 InfiniBand

Category	Product Name / Description	Part Number
Controller	**Single Port InfiniBand Adapter** Mellanox ConnectX-3 VPI, MCX353A-FCBT, FDR, PCIe 3.0(x8) **NOTE:** - For using with Windows Server 2012 R2, download the driver	N8104-146

		kit from the NEC website.	
		Dual Port InfiniBand Adapter Mellanox ConnectX-3 VPI, MCX354A-FCBT, FDR, PCIe 3.0(x8) **NOTE:** - For using with Windows Server 2012 R2, download the driver kit from the NEC website.	N8104-147
Cable		**InfiniBand Cable 2m/FRD** Copper	K410-304(02)
		InfiniBand Cable 3m/FDR Copper	K410-304(03)
Switch	**Unit**	**InfiniBand Switch 36 ports/FDR** Mellanox MSX6036F-1SFR 36 ports, FDR, One power supply module included, no power cord	NE3707-061
	Power Supply	**Redundant Power Supply Unit** Power supply module for 36 ports InfiniBand switch, no power cord	NE3707-063

NOTE:

- Up to two InfiniBand adapters can be installed into the system and two adapters should be of the same type.
- The InfiniBand adapters and other options are make-to-order products. Please consult our sales representative in regards to production lead time.

6.3 PCIe SSD Adapter

Category	Product Name / Description	Part Number
PCIe SSD	**PCIe SSD Adapter 365GB** Fusion-io ioDrive2 365GB PCIe 2.0(x4), Low Profile / Full Height	N8118-01

NOTE:

- Server Core is not supported
- Warranty period is the shorter of 3 years (37 months) or until the total bytes of written value (PBW) exceeds 4 PB. Check the PBW periodically with the utility for the PCIe SSD adapter.
- At least 8GB of memory per one PCIe SSD Adapter is required for adequate performance with this product. Refer to the user's guide for details.
- Operating system can not be installed in this product.

6.4 External Storage Controller

6.4.1 RAID Controller

Category	Product Name / Description	Part Number
Controller	**RAID Controller (1GB, RAID0/1/5/6)** LSI MegaRAID SAS 9285CV-8e RAID0/1/5/6/10/50/60, 1GB, Ext. 8, PCIe 3.0 x8, SAS 6Gb/s, SATA 6Gb/s, flash cache protection modules included	N8103-161

NOTE:

- Only one external RAID controller can be installed when installing an internal RAID Controller with RAID Backup Unit.
- To configure a large-capacity RAID array, it is recommended to configure in RAID 6 or RAID 60 in order to minimize the risk of becoming multiple hard drives failure during the RAID rebuilding process.
- It is recommended to set RAID array configuration drives less than eight in order to minimize the risk of becoming multiple hard drives failure.

6.4.2 Fibre Channel / SAS Controller

Category	Product Name / Description	Part Number
Fibre Channel	**Fibre Channel Controller (1ch)** Emulex LightPulse LPe1250-F8 Host Bus Adapter 8Gb/s, Optical, PCIe 2.0 x8	N8190-153
	Fibre Channel Controller (2ch) Emulex LightPulse LPe12002-M8 Host Bus Adapter 8Gb/s, Optical, PCIe 2.0 x8	N8190-154
	Fibre Channel Controller (1ch) Emulex LightPulse LPe16000B-M6 Host Bus Adapter 16Gb/s, Optical, PCIe 3.0 x8	N8190-157
	Fibre Channel Controller (2ch) Emulex LightPulse LPe16002B-M6 Host Bus Adapter 16Gb/s, Optical, PCIe 3.0 x8 **NOTE**: - Not supported in a single processor configuration with Xeon E5-2403 v2/-2407 v2	N8190-158A
SAS	**SAS Controller** LSI SAS9212-4i4e Host Bus Adapter 6Gb/s SAS, Int. 4(7-pin SATA) / ext. 4(SFF-8088), PCIe 2.0(x8), Low Profile / Full Height **NOTE**: - For using this product in Windows Server 2012 R2 environment, download the driver from the NEC website.	N8103-142
	SAS Controller LSI SAS9300-8e Host Bus Adapter 12Gb/s SAS, ext. 8(SFF-8644 x2), PCIe 3.0 x8	N8103-184

6.5 Serial Port Adapter

Product Name / Description	Part Number
Serial Port Adapter Serial port fixed to PCI bracket	N8117-01A

NOTE:

- Up to one Serial Port Adapter can be installed.

7 Other Add-in Components

7.1 Power Supply

Product Name / Description	Part Number
450W Hot Plug Power Supply 1 x 450 Watt 80 PLUS® Platinum	N8181-86F
800W Hot Plug Power Supply 1 x 800 Watt 80 PLUS® Platinum	N8181-87F
800W Hot Plug Power Supply 1 x 800 Watt 80 PLUS® Titanium **NOTE:** - The power supply only supports 200-240VAC input.	N8181-118F

NOTE:

- The power units must be the same to configure redundancy.
- Use the NEC Power Supply Selector to select appropriate size for power units. For details, please visit the NEC website at:
  http://www.nec.com/en/global/prod/express/collateral/tools/PowerSelector_G01.xls

7.2 Trusted Platform Module Kit

Product Name / Description	Part Number
Trusted Platform Module Kit TPM 1.2 module	N8115-19

NOTE:

- The kit is not available in China.
- The kit is not removable after attachment.
- "TPM Support" in BIOS setup menu must be activated prior to use of this product.
- To use Windows BitLocker drive encryption, be sure to keep the "recovery password" of BitLocker function. The recovery password is required to restore data for hardware replacement during a system error.

7.3 Internal Flash Memory

Available socket: 1

Product Name / Description	Part Number
Internal Flash Memory Internal flash memory to enable software and tools in the EXPRESSBUILDER DVD without DVD media **NOTE:** - Before use, software and tools must be copied from the EXPRESSBUILDER DVD to the flash memory. - The following operations can be performed with the flash memory: - Installation of Windows server with express setup - Installation of Starter Pack—the package of NEC qualified drivers and system setting tools - Installation of NEC ESMPRO Agent and Universal RAID Utility - Performance of the Test and Diagnosis Tool	N8115-07

7.4 Flash FDD

Choose the Flash FDD if you need to prepare an alternative device for a floppy drive.

Product Name / Description	Part Number
Flash FDD USB flash emulating USB floppy disk, Native capacity 1.44 MB	N8160-96

NOTE:

- Up to one drive can be connected.

7.5 Front Bezel

Product Name / Description	Part Number
Front Bezel Front bezel for R120e-1M	N8146-47F

8 Add-on Components

8.1 17-inch LCD Console Drawer

Category		Product Name / Description	Part Number
Drawer w/ KVM	Drawer	**17-inch LCD Console Drawer (8port)** 17-inch LCD, US 83-keys Keyboard, Optical mouse, 8 port KVM switch, 1U height	N8143-77F
	Cable	**Switch Unit Connection Cable Set (USB, 1.8m)** 1.8 m, 1 x 15-pin mini D-sub to 1 x 15-pin mini D-sub / 1 x 4-pin USB A	K410-118(1A)
		Switch Unit Connection Cable Set (USB, 3m) 3 m, 1 x 15-pin mini D-sub to 1 x 15-pin mini D-sub / 1 x 4-pin USB A	K410-118(03)
		Switch Unit Connection Cable Set (USB, 5m) 5 m, 1 x 15-pin mini D-sub to 1 x 15-pin mini D-sub / 1 x 4-pin USB A	K410-118(05)
Drawer w/o KVM	Drawer	**17inch LCD Console Unit 1U** 17-inch LCD, US 83-keys Keyboard, Optical mouse, 1U height, 4-pin USB B to 4-pin USB A cable 2 m, PS/2 Y-splitter cable 2m, 15-pin mini D-sub VGA cable 2 m	N8143-76F
		17inch LCD Console Drawer (1port) 17-inch LCD, US 103-keys Keyboard with 10-key, Touch pad with 3-button, 1U height, 4-pin USB B to 4-pin USB A cable 1.8 m, Two PS/2 cable 1.8 m, 15-pin mini D-sub VGA cable 1.8 m	N8143-84F
	Keypad	**Keyboard Unit (JP)** JP 108-keys Keyboard with 10-key for N8143-84F 17inch LCD Console Drawer (1port)	N8143-85
		Keyboard Unit (UK) UK 104-keys Keyboard with 10-key, for N8143-84F 17inch LCD Console Drawer (1port)	N8143-87

NOTE:

- There are two VGA connectors on R120e-1M, one on the front side and one on the rear side. However, the front side only works when both are connected at the same time.

8.2 KVM Switch

Category		Product Name / Description	Part Number
KVM Switch		**Server Switch Unit (8 server)** 1U USB 8 port KVM switch	N8191-12F
Cable	KVM	**Switch Unit Connection Cable Set (USB,1.8m)** 1.8 m, 1 x 15-pin mini D-sub to 1 x 15-pin mini D-sub / 1 x 4-pin USB A	K410-118(1A)
		Switch Unit Connection Cable Set (USB,3m) 3 m, 1 x 15-pin mini D-sub to 1 x 15-pin mini D-sub / 1 x 4-pin USB A	K410-118(03)
		Switch Unit Connection Cable Set (USB,3m) 5 m, 1 x 15-pin mini D-sub to 1 x 15-pin mini D-sub / 1 x 4-pin USB A	K410-118(05)
	Cascading	**Switch Unit Connection Cable 1.8 m** 1.8 m, 1 x 15-pin mini D-sub - 1x 15-pin mini D-Sub / 2x PS/2	K410-119(1A)

NOTE:

- There are two VGA connectors on R120e-1M, one on the front side and one on the rear side. However, the front side only works when both are connected at the same time.

8.3 Cable Management Arm

Product Name / Description	Part Number
Cable Management Arm 1U Kit for R120e-1M	N8143-96

NOTE:

- The extension bracket of inner rail must be attached when installing the Cable Management Arm.

8.4 Server Management License

The server integrates the EXPRESSSCOPE Engine 3 as standard. Refer to **Server Management** for the standard management features. For more extensive remote KVM and remote media features, choose the following kit.

Product Name / Description	Part Number
Remote KVM and Media License Kit License for one server. Remote KVM and remote media are enabled regardless of OS status. Remote KVM: - Displays a graphics console on the web browser of the remote terminal (PC/server). - Controls keyboard and mouse via the remote terminals' web browser Remote media: Enables the user to use the CD / DVD / FD / Flash memory of the remote terminals (PC/server) as if accessing the local drives. **NOTE:** Remote KVM and remote media features are not available for virtual machines.	N8115-04

References

Server Management

The EXPRESSSCOPE Engine 3, integrated into the server, provides superior remote control and system management features listed in the table below.

		Standard	With Remote KVM and Media License kit
Hardware monitoring	Temperature/voltage/power/standard LAN/fan/degeneration (memory/hard drive)	✓	✓
	Hardware event log collection	✓	✓
Boot monitoring	Booting, BIOS/POST stall, OS stall, shutdown	✓	✓
Alerting	HW error, Boot error and OS panic (by SNMP, E-Mail)	✓	✓
Remote KVM (via LAN)	POST/BIOS setup, DOS utility	✓[2]	✓
	Panic screen, Boot screen	✓[2]	✓
	Text-based screen (OS console)	✓[2]	✓
	GUI-based screen (OS console)	-	✓
	Remote console recording	-	✓
Remote control (via LAN)	Remote reset/power on-off/ dump	✓	✓
	OS shutdown	✓[1]	✓[1]
	Remote media (CD/DVD/FD)	-	✓
	Server Management Command Line Protocol (DMTF compliant)	✓	✓
	Remote control via Web browser (without dedicated app)	✓	✓
	Remote batch	✓	✓
	Scheduling (without UPS)	✓[1]	✓[1]
Others	Set automatic IP address via DNS/DHCP	✓	✓
Remote wakeup	Wake On LAN, Wake On Ring	✓	✓
Centralized management	Monitoring and control of multiple servers	✓	✓
Industry standard	IPMI	2.0	2.0

[1] The feature is not supported on VMware ESXi systems.

[2] The standard serial port is not available for the feature.

OS Support Matrix for PCI Cards and Embedded Controllers

Part number	Product Name	WS 2012 R2	WS 2012	WS 2008 R2	WS 2008	WS 2008 x64	RHEL 7	RHEL 6	RHEL 6 x64	RHEL 5	RHEL 5 x64	ESXi 5.5	ESXi 5.1	ESXi 5.0
-	Embedded SATA non-RAID Controller	✓	✓	✓	✓	✓	✓	✓	✓	✓	✓	✓	✓	✓
-	Embedded 1GbE NIC	✓	✓	✓	✓	✓	✓	✓	✓	✓	✓	✓	✓	✓
N8103-172	RAID Controller (512 MB, RAID 0/1)	✓	✓	✓	✓	✓	✓	✓	✓	✓	✓	✓	✓	✓
N8103-173	RAID Controller (512 MB, RAID 0/1/5/6)	✓	✓	✓	✓	✓	✓	✓	✓	✓	✓	✓	✓	✓
N8103-174	RAID Controller (1 GB,RAID 0/1/5/6)	✓	✓	✓	✓	✓	✓	✓	✓	✓	✓	✓	✓	✓
N8103-168	RAID Controller (1 GB,RAID 0/1/5/6)	✓	✓	✓	✓	✓	✓	✓	✓	✓	✓	✓	✓	✓
N8103-161	RAID Controller (1 GB,RAID 0/1/5/6)	✓	✓	✓	✓	✓	✓	✓	✓	✓	✓	✓	✓	✓
N8103-142	SAS Controller	✓	✓	✓	✓	✓	-	✓	✓	✓	✓	-	✓	✓
N8103-184	SAS Controller	✓	✓	-	-	-	-	-	✓	-	-	-	-	-
N8190-153	Fibre Channel Controller	✓	✓	✓	✓	✓	-	✓	✓	✓	✓	✓	✓	✓
N8190-154	Fibre Channel Controller (2ch)	✓	✓	✓	✓	✓	-	✓	✓	✓	✓	✓	✓	✓
N8190-157	Fibre Channel Controller	✓	✓	✓	-	-	-	-	✓	-	-	✓	-	-
N8190-158	Fibre Channel Controller (2ch)	✓	✓	✓	-	-	-	-	✓	-	-	✓	-	-
N8104-135	Dual Port 1000BASE-T Riser Card	✓	✓	✓	✓	✓	✓	✓	✓	✓	✓	✓	✓	✓
N8104-138	1000BASE-T adapter	✓	✓	✓	✓	✓	✓	✓	✓	✓	✓	✓	✓	✓
N8104-132	Dual Port 1000BASE-T Adapter	✓	✓	✓	✓	✓	✓	✓	✓	✓	✓	✓	✓	✓
N8104-133	Quad Port 1000BASE-T Adapter	✓	✓	✓	✓	✓	✓	✓	✓	✓	✓	✓	✓	✓
N8104-145	Dual Port 1000BASE-T Adapter	-	✓	✓	✓	✓	✓	✓	✓	✓	✓	✓	✓	✓
N8104-136	Dual Port 10GBASE-T Riser Card	✓	✓	✓	✓	✓	✓	✓	✓	✓	✓	✓	✓	✓
N8104-137	Dual Port 10GBASE SFP+ Riser Card	✓	✓	✓	✓	✓	✓	✓	✓	✓	✓	✓	✓	✓
N8104-128	10GBASE adapter (SFP+/2ch)	✓	✓	✓	✓	✓	✓	✓	✓	✓	✓	✓	✓	✓
N8104-149	10GBASE adapter (SFP+/2ch)	✓	✓	✓	✓	-	✓	✓	✓	-	-	✓	✓	-
N8104-153	Dual Port 10GBASE-T Adapter	✓	✓	-	-	-	✓	-	✓	-	-	-	-	-
N8104-148	Dual Port 10GBASE SFP+ Adapter	-	-	-	-	-	-	-	✓	-	-	-	-	-
N8104-146	Single Port InfiniBand Adapter	✓	✓	-	-	-	-	-	✓	-	-	-	-	-
N8104-147	Dual Port InfiniBand Adapter	✓	✓	-	-	-	-	-	✓	-	-	-	-	-
N8118-01	PCIe SSD Adapter 365GB	✓	✓	-	-	-	-	-	-	-	-		-	-

Supported PCI Cards and Installable Slots

Part Number	Product Name	Slots			
		#1A	#1B	#1C	#1D
N8103-172	RAID Controller (512 MB, RAID 0/1)	✓	-	-	-
N8103-173	RAID Controller (512 MB, RAID 0/1/5/6)	✓	-	-	-
N8103-174	RAID Controller (1 GB,RAID 0/1/5/6)	✓	-	-	-
N8103-168	RAID Controller (1 GB,RAID 0/1/5/6)	-	✓	✓	-
N8103-161	RAID Controller (1 GB,RAID 0/1/5/6)	-	✓	✓	-
N8103-142	SAS Controller	-	✓	✓	-
N8103-184	SAS Controller	-	✓	✓	-
N8190-153	Fibre Channel Controller	-	✓	✓	-
N8190-154	Fibre Channel Controller (2ch)	-	✓	✓	-
N8190-157	Fibre Channel Controller	-	✓	✓	-
N8190-158	Fibre Channel Controller (2ch)	-	✓	✓	-
N8104-135	Dual Port 1000BASE-T Riser Card	-	-	-	✓
N8104-138	1000BASE-T adapter	-	✓	✓	-
N8104-132	Dual Port 1000BASE-T Adapter	-	✓	✓	-
N8104-145	Dual Port 1000BASE-T Adapter	-	✓	✓	-
N8104-133	Quad Port 1000BASE-T Adapter	-	✓	✓	-
N8104-136	Dual Port 10GBASE-T Riser Card	-	-	-	✓
N8104-137	Dual Port 10GBASE SFP+ Riser Card	-	-	-	✓
N8104-128	10GBASE adapter (SFP+/2ch)	-	✓	✓	-
N8104-153	Dual Port 10GBASE-T Adapter	-	✓	✓	-
N8104-148	Dual Port 10GBASE SFP+ Adapter	-	✓	✓	-
N8104-149	10GBASE adapter (SFP+/2ch)	-	✓	✓	-
N8104-146	Single Port InfiniBand Adapter	-	✓	✓	-
N8104-147	Dual Port InfiniBand Adapter	-	✓	✓	-
N8118-01	PCIe SSD Adapter 365GB	-	✓	✓	-
N8117-01A	Serial Port Adapter	-	-	✓	-

Copyright Notice and Liability Disclaimer

The information contained herein is subject to change without notice.

Microsoft and Windows Server are either registered trademarks or trademarks of Microsoft Corporation in the United States and/or other countries

Intel and Xeon are registered trademarks or trademarks of Intel Corporation or its subsidiaries in the United States and other countries.

Linux is a trademark of Linus Torvalds.

Red Hat is a registered trademark of Red Hat, Inc. in the U.S.

All other products, brands, or trade names used in this document are trademarks or registered trademarks of their respective holders.

NEC shall not be liable for technical or editorial errors or omissions contained herein.

For hard drive capacity measurements, 1 GB = 1 billion bytes. Actual formatted capacity is less.

Revision History

Revision	Date	Description
6.0	January 28, 2015	**New products added:** SAS Controller / N8103-184 **Part number changed:** Flash FDD / N8160-96
5.1	November 21, 2014	**Others:** Supported N8104-153 Dual Port 10GBASE-T Adapter on Windows Server 2012 and Windows Server 2012 R2
5.0	October 16, 2014	**New products added:** 10GBASE Adapter (SFP+/2ch) / N8104-149 PCIe SSD Adapter 365GB / N8118-01 **Part number changed:** Fibre Channel Controller (2ch) / N8190-158A **Discontinued product deleted:** Dual Port 10Gb Converged Network Adapter / N8104-131 **Others:** Added Red Hat Linux 7 to the list of operating system supported Updated OS support matrix
4.0	July 18, 2014	**New products added:** 450GB 15K Hot Plug 2.5-inch SAS HDD / N8150-442 600GB 15K Hot Plug 2.5-inch SAS HDD / N8150-443 Dual Port 10GBASE SFP+ Adapter / N8104-148 Dual Port 10GBASE-T Adapter / N8104-153 **Others:** Updated the Specification table (Regulatory and Safety) SAS HDD part numbers changed (added “B”) Added configuration limitations for N8190-157/158 Added a note for processors Updated the Maximum Memory Speed matrix Updated notes for 10Gb Network Adapters WS2012 R2 is added in the supported OS for iSCSI Added a note for InfiniBand Adapter WS2012 R2 is supported with N8103-142 SAS Controller Added a note for VGA connectors
3.0	January 16, 2014	**New products added:** 800W Hot Plug Power Supply / N8181-118F **Part number changed:** Internal Slim DVD-ROM Drive / N8151-122 **Others:** Added Windows Server 2012 R2 and Red Hat Linux 5.9 to the list of operating system supported Updated OS support matrix
2.0	October 25, 2013	**New products added:** Single Port InfiniBand Adapter / N8104-146 Dual Port InfiniBand Adapter / N8104-147 InfiniBand Cable 2m/FRD / K410-304(02) InfiniBand Cable 3m/FRD / K410-304(03) InfiniBand Switch 36 ports/FDR / NE3707-061 Redundant Power Supply Unit / NE3707-063 **Others:** Added VMware ESXi 5.5 to the list of operating system supported Updated OS support matrix
1.0	September 13, 2013	Initial release